DENON

Hi-Fi Component Tuner Amplifier

For European/Australian Models

SERVICE MANUAL
MODEL DRA-350

SOLID STATE
TUNER AMPLIFIER

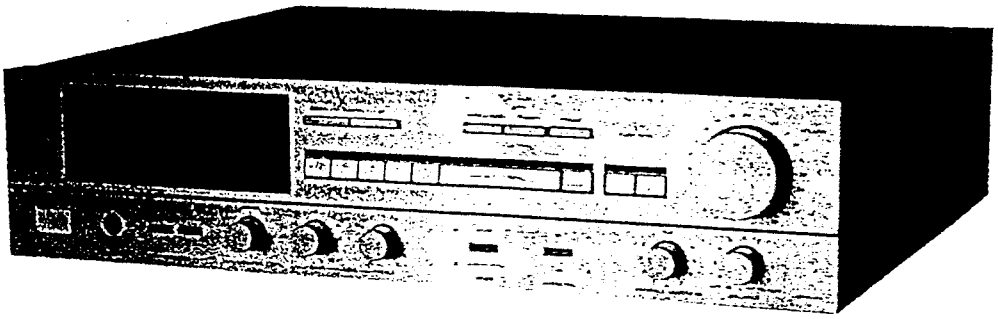

CONTENTS

PRECAUTION FOR INSTALLATION 2
ADVICE FOR USE 2
SPECIFICATIONS 2
NAME AND FUNCTION OF PARTS 3
CONNECTIONS 4,5
BLOCK DIAGRAM 6
METHOD OF ADJUSTMENT ..... 7~9
SEMICONDUCTORS 10,11
PRINTED WIRING BOARD PATTERNS AND PARTS LIST
ETC0730N, ETC0730P CONTROL UNIT 11
ETC0731N, ETC0731P AMP TUNER UNIT 12,13
CONNECTION DIAGRAM 14,15
EXPLODED VIEW OF CHASSIS AND CABINET 16,17
WIRING DIAGRAM 18

NIPPON COLUMBIA CO., LTD.

NOV. 1984

PRECAUTIONS FOR INSTALLATION

DRA-350 uses a newly developed heat emitting unit by employing heat pipes. Since the heat pipes contain a coolant, the DRA-350 must be set level or the desired heat emitting effect cannot be achieved. Always install this unit horizontally.

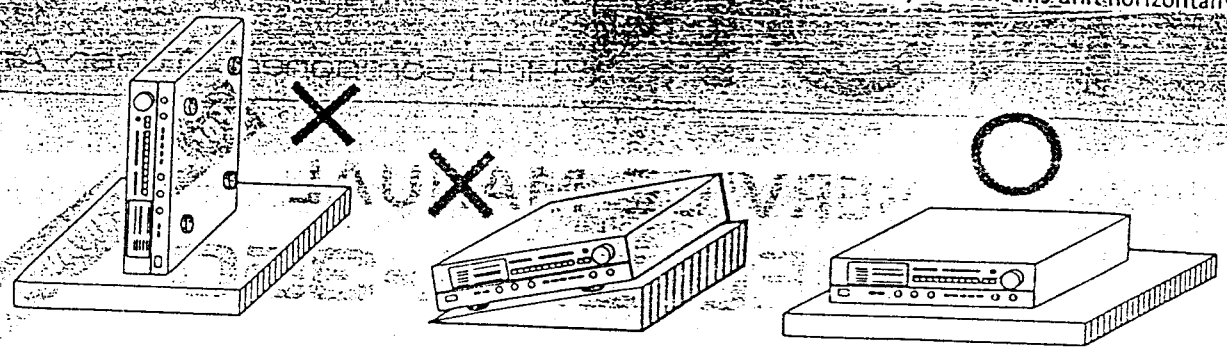

ADVICE FOR USE

- Do not place the set in direct sunlight, in hot areas such as near heating equipment, with high humidity or dust levels. This may cause damage to the unit.
- Check that all parts are connected correctly before turning on the power source.
- When user is absent for long periods, be sure to remove plug from wall socket.
- Do not use insecticide, benzene or thinner near the unit, or the cabinet color will fade. Avoid using polish: use a soft cloth (e.g. silicon cloth).
- Although the unit is designed to support weight, it is recommended that the user does not place anything too heavy on it. If you place any equipment likely to induce hum, make sure there is enough space to between each piece of equipment prevent such hum.

SPECIFICATIONS

AMPLIFIER SECTION

Continuous Power Output:	36 W + 36 W at 8 ohm [(IEC-65) Temperature limit OUTPUT]
Power Bandwidth (IHF):	5 Hz ~ 40 kHz (T.H.D. 0.1% both ch. driven at 8 ohm)
Total Harmonic Distortion (20 Hz to 20 kHz):	−3 dB power into 8 ohm 0.03%
Damping Factor:	More than 80 (at 1 kHz, 8 ohm)
Frequency Response:	PHONO RIAA Standard Curve (Recording Output) 20 Hz ~ 20 kHz ± 0.5 dB MM TAPE, VIDEO/DAD 20 Hz ~ 50 kHz ± 1.5 dB
Input Sensitivity and Impedance:	PHONO MM 2.5 mV 47 k ohm TAPE, VIDEO/DAD 150 mV More than 33 k ohm
Maximum Input Level (at 1 kHz):	PHONO MM 150 mV
Signal to Noise Ratio (IHF-A):	PHONO MM at 5.0 mV input 80 dB TAPE, VIDEO/DAD 95 dB
Tone Controls:	BASS ± 8 dB at 100 Hz TREBLE ± 8 dB at 10 kHz
Loudness, Control Effect:	VARIABLE LOUDNESS "10" POSITIONS: 50 Hz/10 kHz, + 10 dB/ + 5 dB
Subsonic Filter Effect:	15 Hz, −6 dB/oct

TUNER SECTION

[FM]

Receiving Range:	87.5 ~ 108 MHz
Usable Sensitivity:	1.0 μV (11.2 dBf)
50 dB Quieting Sensitivity:	MONO 2.0 μV (17.2 dBf) STEREO 23 μV (38.5 dBf)
Signal to Noise Ratio:	MONO 82 dB STEREO 80 dB
Total Harmonic Distortion:	MONO 0.1% at 1 kHz STEREO 0.3% at 1 kHz
Capture Ratio:	1.5 dB
Image Rejection:	75 dB
AM Suppression:	60 dB
Selectivity:	70 dB (± 400 kHz)
Frequency Response:	30 Hz ~ 15 kHz $^{+0.5}_{-1.5}$ dB
Stereo Separation:	45 dB at 1 kHz

[AM]

Receiving Range:	522 ~ 1611 kHz
Usable Sensitivity:	18 μV
Signal to Noise Ratio:	55 dB

GENERAL

Power Supply:	AC 220 V 50 Hz (for Europe) AC 240 V 50 Hz (for UK & Australia)
Power Consumption:	90 W (for Europe & Australia)
Dimensions:	434 mm (17-3/32") x 112 mm (4-13/32") H x 400 mm (15-3/4") D
Weight:	7.5 kg (16 lbs 4 oz)

Design and specifications are subject to change without prior notice.

NOTE: The following codes correspond to the appropriate models.
E2 for Europe, EA for Australia, EK for UK.
This Service Manual is prepared base on E2 Gold Version.

NAME AND FUNCTION OF PARTS

FRONT PANEL

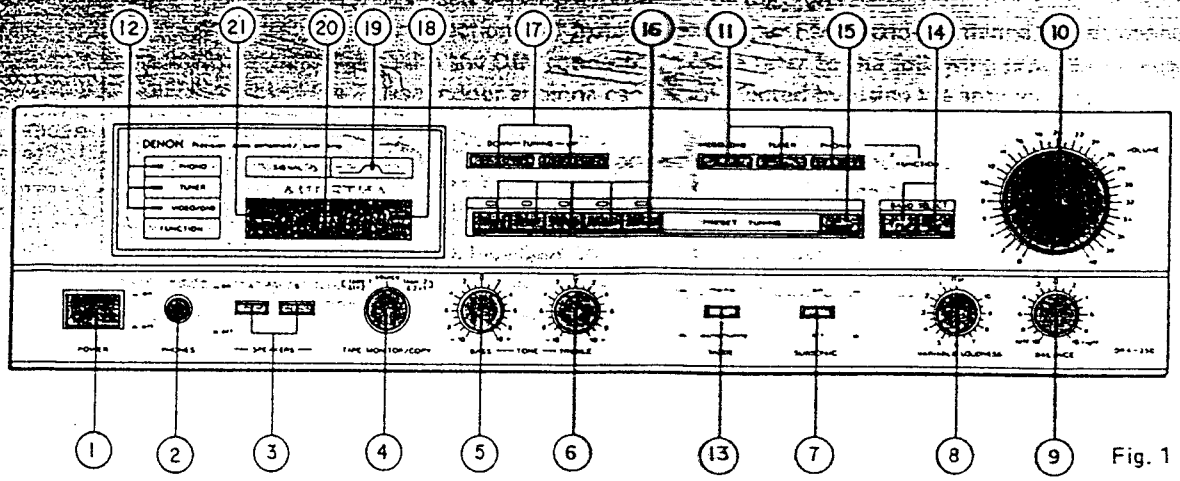

Fig. 1

1. POWER (Power Switch)
2. PHONES (Headphone Jack)
3. SPEAKER (Speaker Select Switch)
4. TAPE MONITOR/COPY (Tape Monitor/Copy Switch)
5. BASS (Bass Control)
6. TREBLE (Treble Control)
7. SUBSONIC FILTER (Subsonic Filter Switch)
8. VARIABLE LOUDNESS (Loudness Control)
9. BALANCE (Balance Control)
10. VOLUME (Volume Control)
11. FUNCTION (Input Select Switch)
    • PHONO, • TUNER, • VIDEO/DAD
12. FUNCTION INDICATOR
13. MODE (FM Mode, Tuning Mode and Muting Switch)
    : auto/muting, : mono
14. BAND SELECT (Band Select Buttons)
    • AM, • FM
15. MEMORY (Memory Button)
16. PRESET CHANNEL 1 ~ 5 (Station Presetting Buttons)
17. TUNING (Tuning Buttons)
    UP, DOWN
18. MEMORY INDICATOR
19. SIGNAL (Signal Strength Indicator)
20. FREQUENCY DISPLAY
21. STEREO (Stereo Indicator)

BACK PANEL

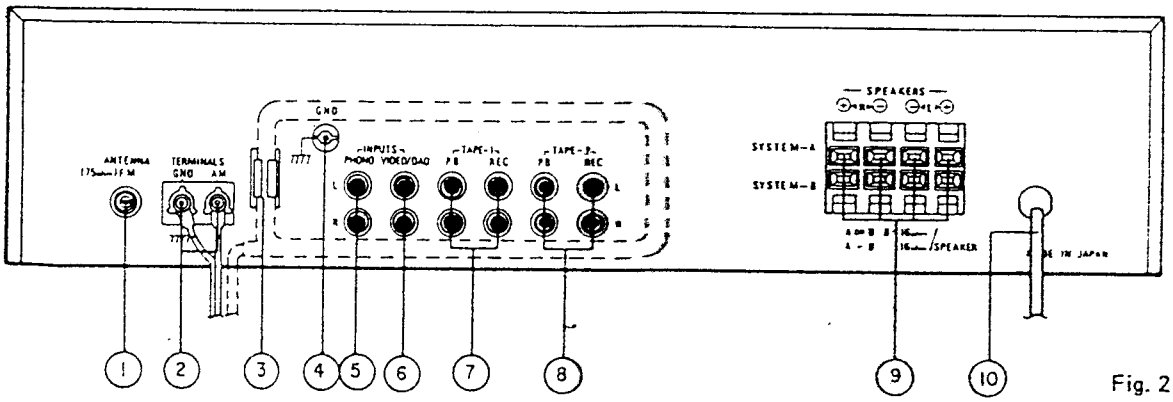

Fig. 2

1. FM ANT 75 ohm (FM Antenna Terminal)
2. AM ANT (AM Antenna Terminal)
3. AM LOOP ANT (AM Loop Antenna)
4. GND (Grounding Terminal)
5. PHONO (Phono Input Terminals)
6. VIDEO/DAD (Input Terminals)
7. 8. TAPE-1, -2 (Playback and Recording Terminals)
9. SPEAKERS (Speaker Terminals)
10. AC CORD (Power Cord)

CONNECTIONS

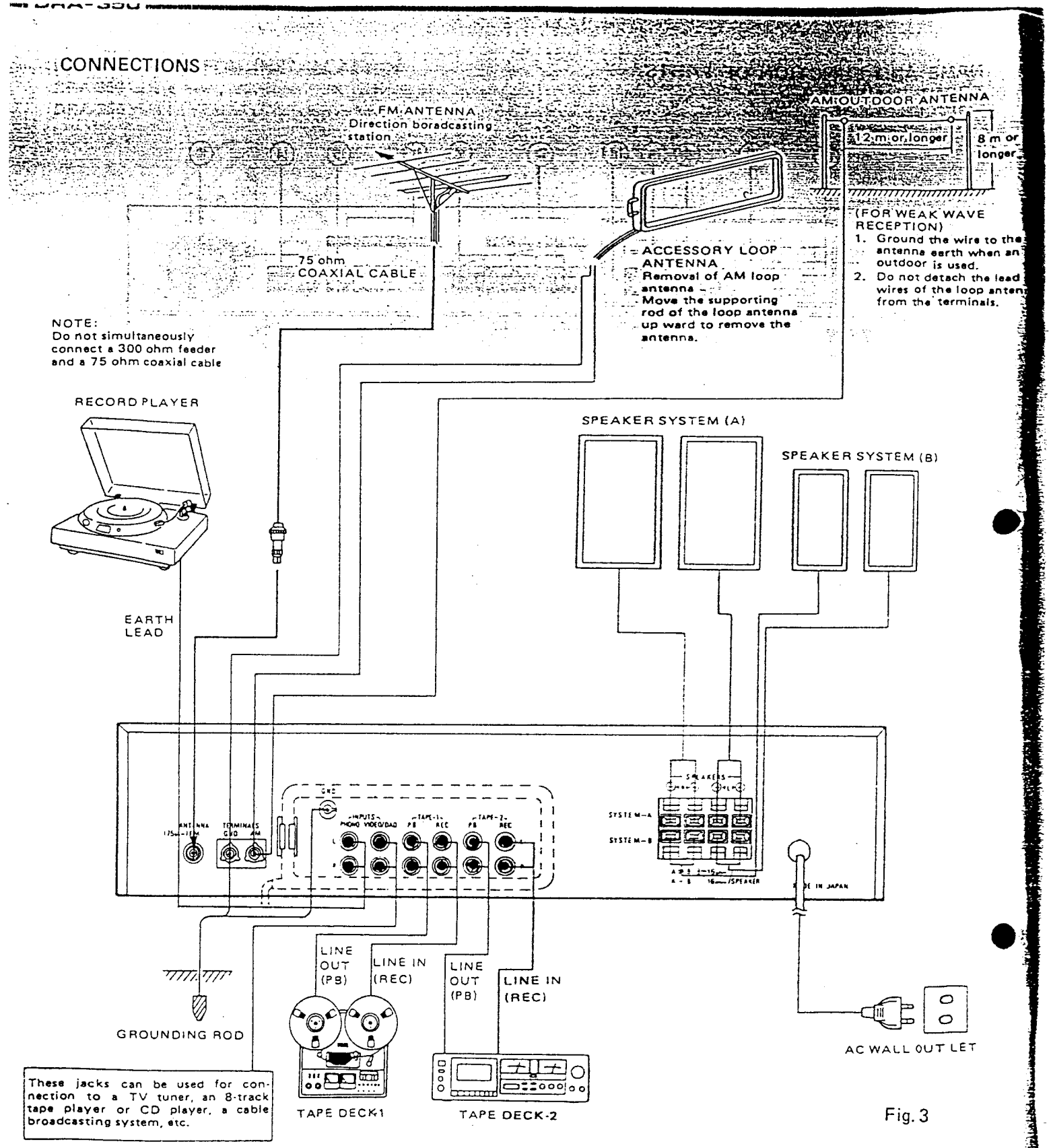

Fig. 3

- Do not plug the power source cord into an AC outlet until all the connections are completed.
- Connect the right (R) channel plug to the right (R) channel jack, and the left channel plug to the left channel jack.
- Insert the plugs firmly into the corresponding jacks. If a connection is incomplete, noise may be generated.
- Do not bundle the pin plug cords with the power source cord and do not place the pin plug cords near the power transformer, or humming and other noise may be generated.
- Always connect the pin plug cord to the input terminal "PHONO" because this terminal is highly sensitive. If this terminal is not connected, induction hum may be generated.

ANTENNA INSTALLATION

○ FM OUTDOOR ANTENNA CONNECTION (Fig. 4)

Use a coaxial cable of 75-ohm resistance, to connect the outdoor antenna and the tuner. The coaxial cable of 75-ohm resistance (3C-2V-5C-2V) is preferable to obtain better performance of the tuner.

Contact your local dealer for details on selection and installation of the FM outdoor antenna. When connecting the coaxial cable to the antenna terminal using with the DIN connector, please refer to the following procedures respectively. The 300-ohm outdoor antenna and the T-type indoor antenna can be connected by using the antenna adaptor.

○ AM ANTENNA CONNECTION (Fig. 5)

Attach AM Loop antenna to antenna holder on back panel. Connect leads to AM and GND. Use this terminal also for an outdoor antenna.

Orient the loop antenna horizontally to obtain optimum reception.

In places where strong, clear signals can not be received, due to location and/or environmental conditions, connect an insulated wire to the AM antenna terminals and attach it to the wall. Where broadcast stations are distant and only weak signals are received, or where signals are blocked by obstacles, install an AM outdoor antenna.

* Even if an AM outdoor antenna is installed, do not detach the AM loop antenna.

GROUNDING

If there is much noise during reception, it is recommended that a grounding wire be used.

Connect a thick insulated wire to the "GND" terminal, and wind the unconnected bare end around a metal water pipe, a grounding rod, or a grounded copper plate.

* Never connect grounding the wire to a gas pipe. This could cause fire or explosion.

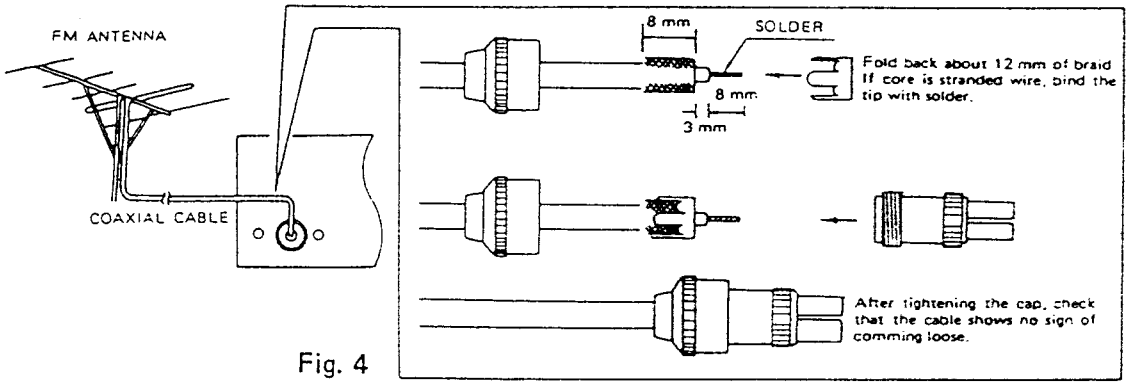

Fig. 4

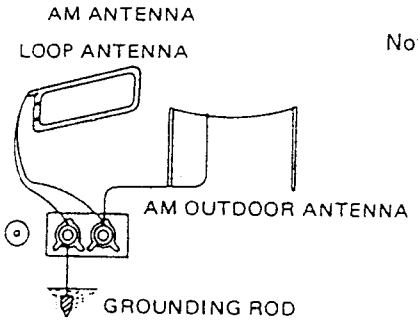

Note: Even if an external AM antenna is used, the LOOP antenna connect AM loop antenna to the back panel. Be sure the lead terminal does not touch the metal part of back panel.

Fig. 5

BLOCK DIAGRAM

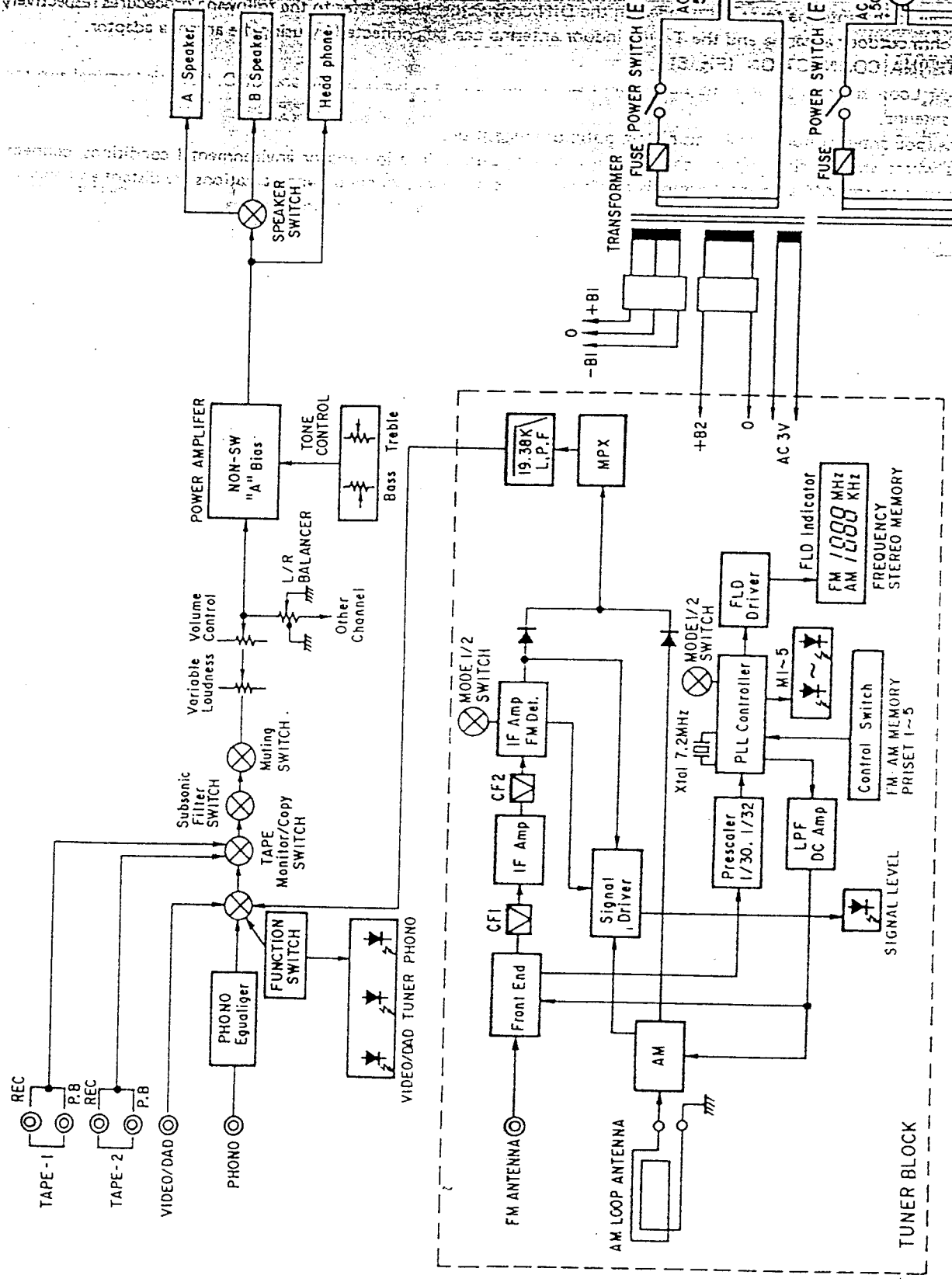

Fig. 6

METHOD OF ADJUSTMENTS

When marking adjustments, be sure the power supply is at the rated voltage and the room air is in normal condition with respect to temperature and humidity.

● Amplifier Section

1. IDLING CURRENT (FIG. 7)

(1) Set controls as follows.

POWER Switch → off (▮)
VOLUME Control → 0 (min.)
SPEAKERS → off (▮)
Temperature → 15°C ~ 30°C
VR501 and VR502 of the ETC0731B (AMP. TUNER Unit) → Center
Power supply → AC 240 V ±1 %, 50 Hz (EA), → AC 220 V ±1%, 50 Hz (E2)

(2) Connect Digital Voltmeter to the test points 501 (+), 502 (-) and 503 (+), 504 (-) of the ETC0731B.

(3) Turn the Power Switch on and rotate VR501 clockwise so that the Digital Voltmeter reads 1mV ±0.2 mV DC at the test point 501, 502. Follow the same procedure to VR502 for test point 503, 504.

(4) Warm up three minutes, then readjust VR501 and VR502 as in step (3) so that the Digital Voltmeter reads 4 mV ±0.5 mV DC.

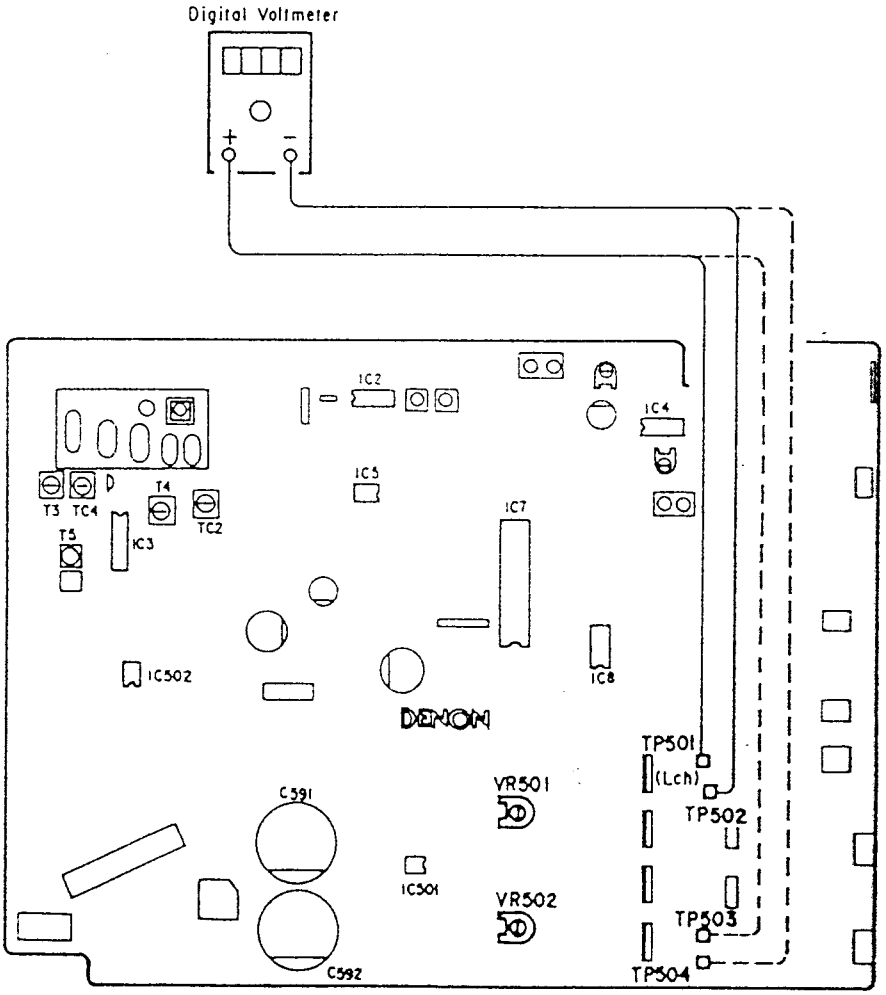

Fig. 7

FM/MPX ALIGNMENT (Fig. 8)

Table 1

Step	Alignment Item	Tuning Frequency Setting	Input					Output		Adjustment		Remarks
			Type	Frequency	Input Level	Modulation	Coupling	Type	Connect to	Points	Adjust to	
1	76 kHz	98 MHz	FM Standard Signal Generator Mono.	98 MHz	60 dBμ	1 kHz 100%	Antenna Terminal	Frequency Counter	T.P. 3 T.P. 4 (GND)	VR1	76 kHz ± 50 Hz	Function: FM Mode: Auto
2	Tuning Center	98 MHz	FM SSG, Mono	98 MHz	60 dBμ	None	Antenna Terminal	Center Meter	T.P. 1, 2	T-1	Center of Tuning Meter	Function: FM Mode: Auto
3	Distortion (Mono)	98 MHz	FM SSG, Mono	98 MHz	60 dBμ	1 kHz 100%	Antenna Terminal	Distortion Meter	Output TAPE 2 REC (L)	T-2	Minimum Distortion	Function: FM Mode: Auto
4	Distortion (Stereo)	98 MHz	FM SSG Stereo (L)	98 MHz	60 dBμ	Main: 1 kHz L-ch 90% Pilot: 10%	Antenna Terminal	Distortion Meter	Output TAPE 2 REC (L)	IFT on Front End	Minimum Distortion	Function: FM Mode: Auto
5	Noise Center & Distortion	Repeat 2, 3 and 4 to obtain minimum distortion and same time indicating of center meter at center condition.										
6	Separation	98 MHz	FM SSG Stereo (L), (R)	98 MHz	60 dBμ	Main: 1 kHz L-ch 90% Pilot: 10%	Antenna Terminal	Audio V.M.	Output TAPE 2 REC (L), (R)	VR-2	Maximum Separation	Function: FM Mode: Auto

AM ALIGNMENT (Fig. 9)

1	AM IF	–	AM IF Sweep	–	Input Level is not over to Works A.G.C.	–	AM Antenna Terminal	Oscilloscope	T.P. 6	T-5	Maximum Height and Best Symmetry Curve	Function: AM Center of Wave Form: 450 kHz
2	Receiving Band Alignment	522 kHz	AM SSG	522 kHz	Input Level is not over to Works A.G.C.	400 Hz 30%	Loop Antenna	Electric DC Voltmeter	T.P. 5, T.P. 7 (GND)	T-4	1.2V ± 20 mV	Function: AM
		1611 kHz	AM SSG	1611 kHz	Input Level is not over to Works A.G.C.	400 Hz 30%	Loop Antenna	Electric DC Voltmeter	T.P. 5, T.P. 7 (GND)	TC-2	8.0V ± 20 mV	Function: AM
3	Tracking Alignment	603 kHz	AM SSG	603 kHz	Input Level is not over to Works A.G.C.	400 Hz 30%	Loop Antenna	Audio V.M.	Output TAPE 1 REC (L)	T-3	Maximum Output	Function: AM
		1404 kHz	AM SSG	1404 kHz	Input Level is not over to Works A.G.C.	400 Hz 30%	Loop Antenna	Audio V.M.	Output TAPE 1 REC (L)	TC-1	Maximum Output	Function: AM
4	Signal LED	999 kHz	AM SSG	999 kHz	55 dB/m	400 Hz 30%	Loop Antenna	–	–	VR-3	To Light-up Signal LED	Function: AM

CONNECTION DIAGRAM OF MEASURING INSTRUMENTS

• FM

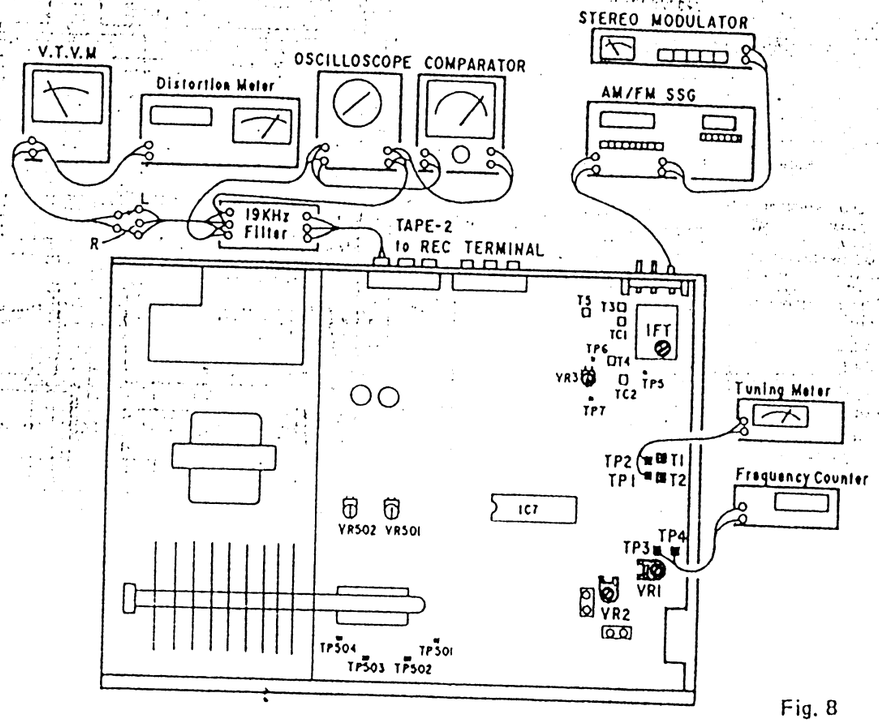

Fig. 8

• AM

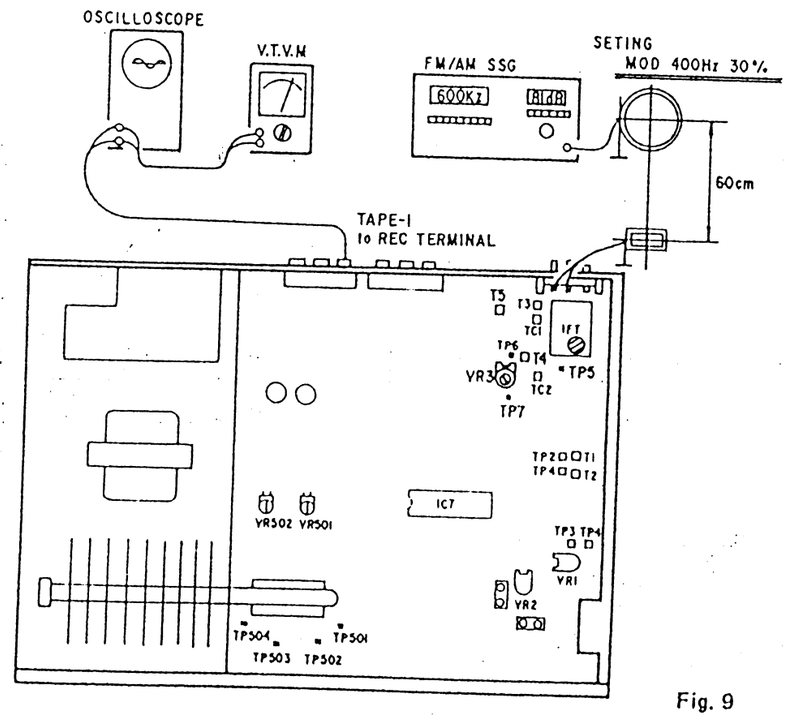

Fig. 9

ROUGH DIAGRAM OF ADJUSTMENT POINTS
ETC0731N or P.AMP. TUNER UNIT (Component Side)

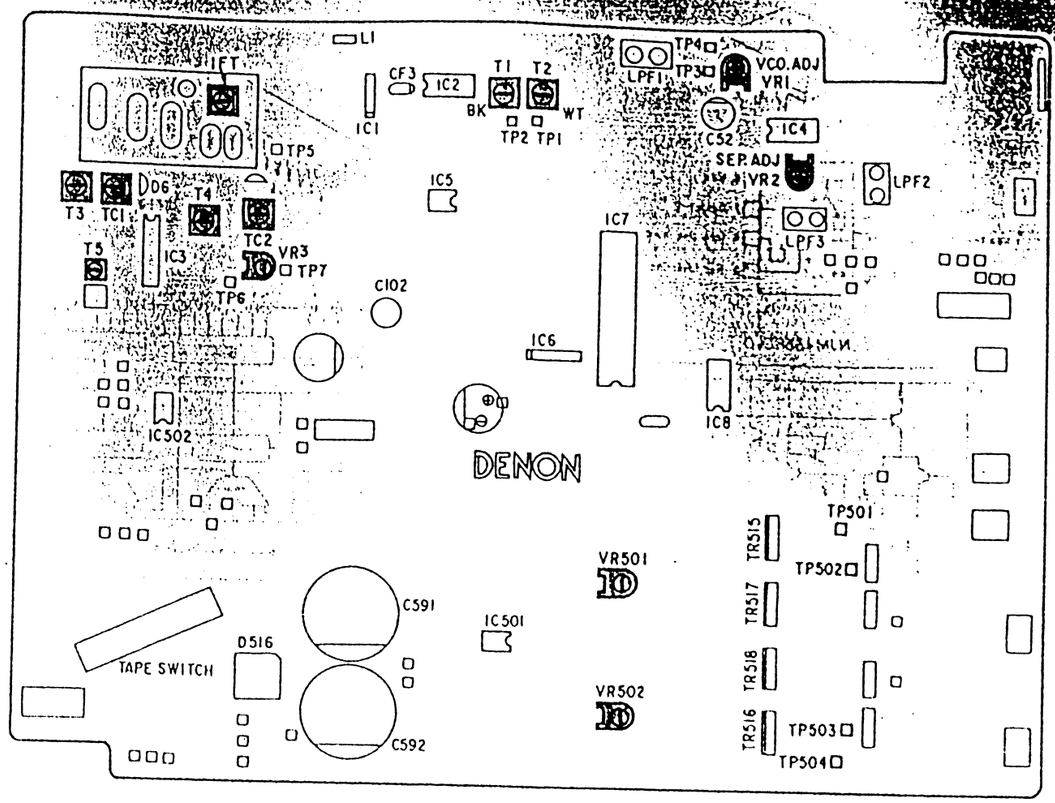

Fig. 10

TUNING METER JIG

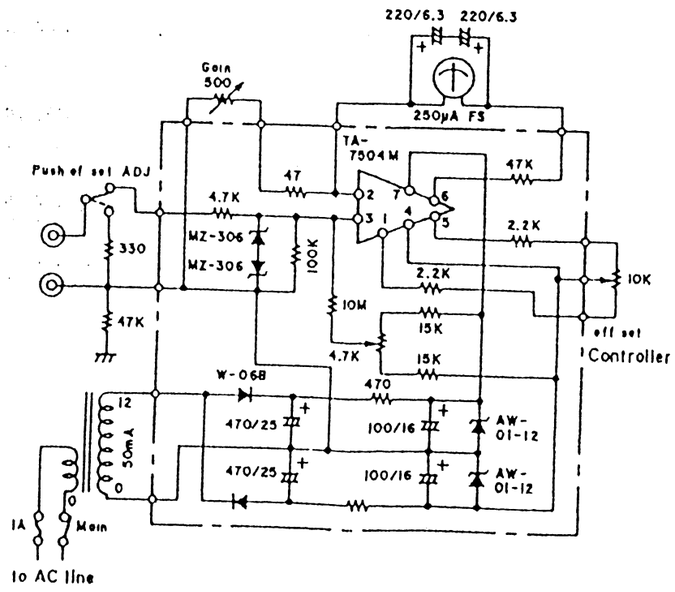

Fig. 11

SEMICONDUCTORS

- IC's

NJM4558D-D
(JRC)
NJM072DE
(JRC)

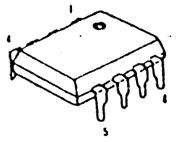

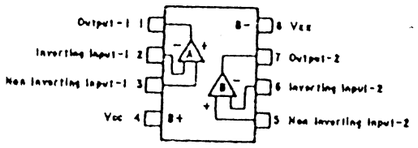

NJM4558D-D

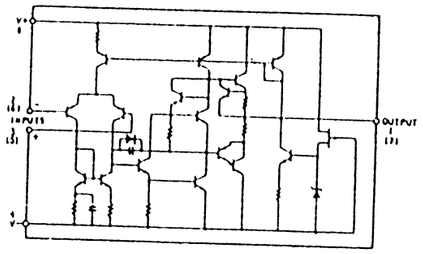

TD6301AP
(Toshiba)

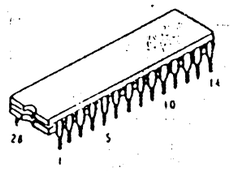

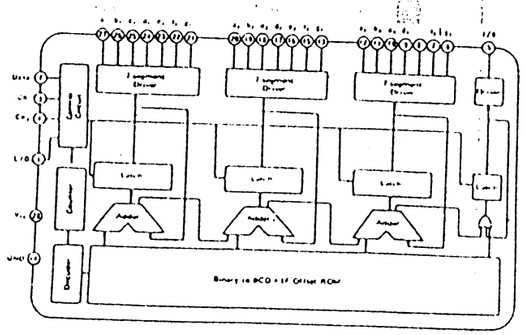

FUNCTIONS OF TERMINALS (TD6301AP)

Pin No.	Name	Function
1	L/D	Output status select input terminal. Input terminal for selecting output status by the indicator (LED, FL, LCD).
2	Data	Receiving frequency data input terminal. Input serially by the system controller LSI.
3, 4	CK1 CK2	Received frequency data input control timing input terminal. Transferred simultaneously with data by the system controller LSI.
5	I/O	Segment drive output terminal. 100 MHz-unit display at FM time. Only 1 pin is used for output because of 1 to 0 in both FM/AM.

Pin No.	Name	Function
6~12	a^1~g^1	7 segment drive output terminal. 10 MHz-unit display at FM time. 100 kHz-unit display at AM time.
13, 15~20	a^2~g^2	7 segment drive output terminal. 1 MHz-unit display at FM time. 10 kHz-unit display at AM time.
21~27	a1~g1	7 segment drive output terminal. 100 kHz-unit display at FM time. 1 kHz-unit display at AM time.
14, 28	Vcc GND	Supply voltage applying terminal.

TD6104P
(Toshiba)

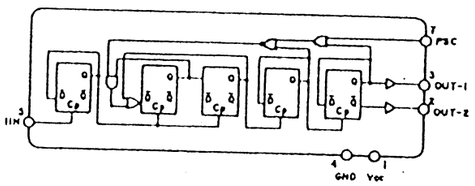

FUNCTIONS OF TERMINALS (TD6104P)

Pin No.	Name	Functions
5	f_{IN}	FM station signal input terminal Frequency range 60 – 140 MHz Input level 75 – 300 mVrms
3	OUT-1	Dividing an input signal into 1/30 or 1/32 through dividing output terminal f_{IN}. Output level 0.5(V)MIN
2	OUT-2	OUT-1 Inverted signal output. Because of open emitter system, If it is to be used. External resistor is necessary. Open in general.
7	PSC	Dividing value select control terminal 1/32 when Vpcc ≧ 2(V), 1/30 when Vpcc ≦ 1(V)
6	C	for bias circuit. Connect C = 2200 pF (approx.) between the unit and the GND.
1 4	Vcc GND	Power terminal Vcc = 5V Icc = 5 mA (standard), 10 mA (max.)

TA7060AP (Toshiba)

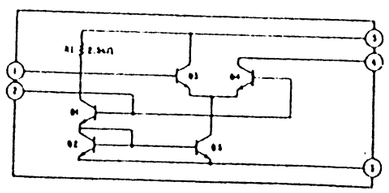

TC9147BP
(Toshiba)

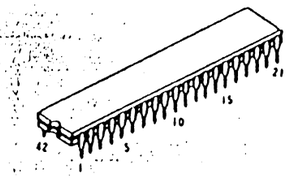

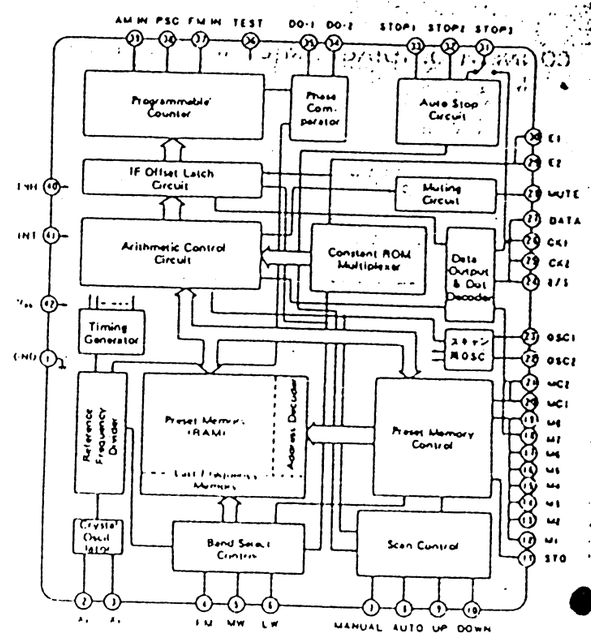

FUNCTIONS OF TERMINALS

Pin No.	Symbol	Name	Function
2	XT	Crystal oscillator terminal	Connects crystal 7.2 MHz for reference frequency.
3	XT		
4	FM	FM band specifying input	Selects FM, MW and LW in the mutual reset mode.
5	MW	MW band specifying input	
6	LW	LW band specifying input	
7	MANUAL	Manual tuning mode specifying input	Selects between manual operation and auto search operation in mutual reset mode at UP/DOWN channel select time.
8	AUTO	Auto search tuning mode specifying input	
9	UP	UP operation key input	UP/DOWN channel selection by connecting a push-key
10	DOWN	DOWN operation key input	
11	STO	Memory store instruction input	With this input, preset memory is set to write enable status.
12 ~ 19	M1~M8	Preset memory channel specifying input	Controls read/write of the internal 16-channel preset memory in conjunction with MC1 and MC2 input.
20 21	MC1 MC2	Memory control input	Sets the 16 channel preset memory to an 8 channel fixed system for FM/AM (MW + LW) or a 16-channel tandem system for FM+MW+LW (3 bands).
22	OSC2	Oscillator terminal for AM	C/R connecting terminal for oscillator, which determines scan speed at AM search time.
23	OSC1	Oscillator terminal for FM	C/R connecting terminal for oscillator, which determines scan speed at FM search time.
24	0/5	FM Europe 50 kHz output	Europe area FM band 50 kHz step indicating output. Set "H" at 50 kHz.
25 26 27	CK2 CK1 DATE	Received frequency data serial output	Otputs serial data and timing lock to driver TD6301 for receiving frequency digital display. CK1 output is used as Pcc output at the same time.

Pin No.	Symbol	Name	Function
28	MUTE	Muting signal output	Set "H" at muting output time.
29 30	E2 E1	Area specify input	Specifies an area, Japan, U.S.A. or Europe.
31	STOP3	AM-IF signal input	Counts IF 450 kHz signals at AM time and stops auto search.
32	STOP2	Auto search stop signal input	If "H" level is input STOP2 when "H" level is set to STOP1, the auto search is stopped. Used for AR1 or stereo channel receiving status discrimination.
33	STOP1	Scan speed slow input	When "H" level is input, reduces the auto search scan speed to 1/2.
34 35	DO-2 DO-1	Phase comparator output	Two tristate buffers are output in parallel from a single phase comparator.
36	TEST	Test terminal	Sets test mode with "H" level input.
37	FM_{IN}	FM programmable counter input	Connects the output of precaller TD6104P.
38	PSC	Prescaller control output	Controls dividing (1/30, 1/32) of the prescaller TD6104P.
39	AM_{IN}	FM programmable counter input	Inputs AM channel signal.
40	INH	Inhibit input	Oridinary operation at "H" level, and inhibit status at "L" level.
41	INT	Initialize input	Ordinary operation at "H" level, and initialization of internal status at "L" level
42 1	V_{DD} GND	Power applying terminal	Applies 5 ± 0.5 V. Up to 2 V is available as backup.

LA1245
(Sanyo)

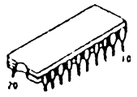

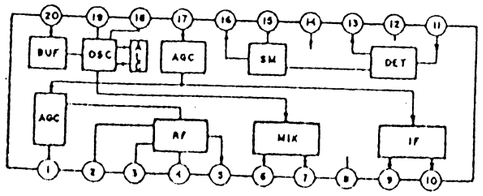

HA11255
HA12016
(Hitachi)

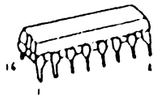

HA12016

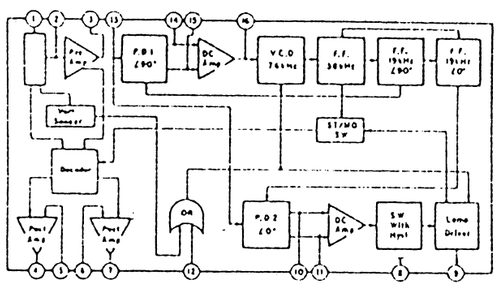

HA11225

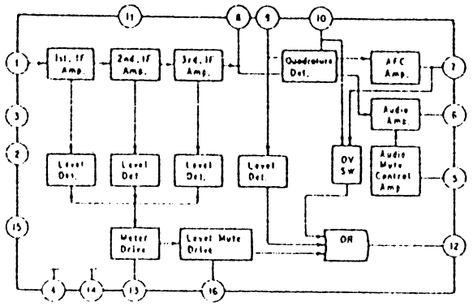

- TRANSISTORS

2SC461(C)
2SC1815(BL)
2SA1015(GR),(Y)
2SC1685(R)
2SA564A(R)
2SC1685(G/R)
2SA988(E/F)
2SC1841(E/F)
2SC535(C)

B(Base)
C(Collector)
E(Emitter)

2SB647A(C)
2SD667A(C)
2SD468A(C)

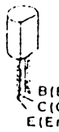

B(Base)
C(Collector)
E(Emitter)

2SD1406(Y/GR)

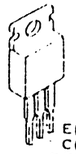

E(Emitter)
C(Collector)
B(Base)

2SA1102(Y/O)
2SC2577(Y/O)

E(Emitter)
C(Collector)
B(Base)

FET 2SK163M

S(Source)
G(Gate)
D(Drain)

FET 2SK381(C)/(D)

S(Source)
G(Gate)
D(Drain)

- DIODES (including LED)

1S2076A

Blue

HZ6-B2 HZ-12A
HZ-9B-2 HZ-16-2

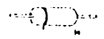

Red

Varactor
SVC321SP-D2

Orange
Red
Brown

S4VB20F

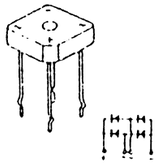

SEL1321G(Green)
SEL1121R(Red)

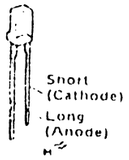

Short
(Cathode)
Long
(Anode)

- ELECTRON RAY INDICATOR TUBE

FIP7FBS

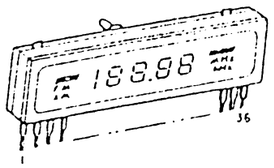

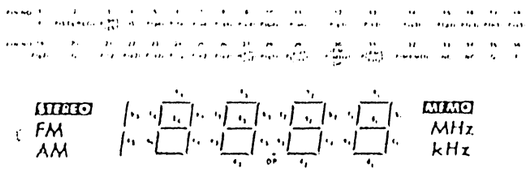

ETC0730N for E2, ETC0730P for EA CONTROL UNIT PARTS LIST

Ref. No.	Part No.	Part Name & Descriptions
		SEMICONDUCTORS
IC401	2620453006	TD6301AP (TOSHIBA) IC
TR401, 402	2730294016	2SC1685(R) TRANSISTOR
TR403	2710178039	2SA564A(R) TRANSISTOR
TR404, 405	2730294016	2SC1685(R) TRANSISTOR
TR406, 407	2710178039	2SA564A(R) TRANSISTOR
D012	3939261014	SEL1321G(GREEN) LED
D401	2760049011	1S2076A DIODE
D402 ~406	3939261001	SEL1121R(RED) LED
D902 ~904	3939261014	SEL1321G(GREEN) LED
		RESISTORS
R080	2412086005	560 ohm ±5% 1/4W CARBON

Ref. No.	Part No.	Part Name & Descriptions
R401, 402	2412130003	39 kohm ±5% 1/4W CARBON
R405 ~408	2412116001	10 kohm ±5% 1/4W CARBON
R410 ~415	2412130003	39 kohm ±5% 1/4W CARBON
R416	2412116001	10 kohm ±5% 1/4W CARBON
R417, 418	2412076007	220 ohm ±5% 1/4W CARBON
R422	2412087004	620 ohm ±5% 1/4W CARBON
R423	2412110007	5.6 kohm ±5% 1/4W CARBON
AR903, 904	2440015022	6.8 ohm ±5% 1W METAL OXIDE (NB)
AR905, 906	2440033020	220 ohm ±5% 1W METAL OXIDE (NB)
R907	2410181009	680 ohm ±5% 1/2W CARBON FILM
R908 ~911	2412068007	100 ohm ±5% 1/4W CARBON FILM
RA401 ~403	2462012003	10 kohm ±20% 1/8W RESISTORS ALLAY

Ref. No.	Part No.	Part Name & Descriptions
		CAPACITORS
C401 ~403	2531006005	2200pF ±10% 50V CERAMIC
C407	2533633007	180pF ±5% 50V CERAMIC
C901, 902	2531024003	0.01μF +80,-20% 50V CERAMIC
C903, 904	2531004007	1000pF ±10% 50V CERAMIC
C951 ~954	2531024003	0.01μF +80,-20% 50V CERAMIC
	2610035007	CR BLOCK
		OTHER PARTS
	2221081204	P.W. BOARD
	EP-5667H1	TERMINAL PIN USED 21
	2090008120	JUMPER WIRE P=10mm USED 34
	2124407008	TACT SWITCH USED 10
	2124409006	POWER SWITCH USED 1

Ref. No.	Part No.	Part Name & Descriptions
	2124499003	2P PUSH SWITCH USED 1
	2124504008	INPUT SELECTOR SWITCH USED 1
	2050151004	8P PUSH TERMINAL
	2030241057	1P CONTACT ASS'Y
	2048100009	HEADPHONE JACK
	2050185038	3P WIRE HOLDER USED 6
	2050185041	4P WIRE HOLDER
	2050185054	5P WIRE HOLDER USED 2
	2050185067	6P WIRE HOLDER
	2050185070	7P WIRE HOLDER USED 2
	2050133048	4PNH CONNECTOR BASE
	1460703108	LED GUIDE
	4770210016	PUSH RIVET USED 3
	2032154003	2P CONNECTOR CORD USED 2
	2036116050	4P CONNECTOR CORD
	2038109078	5P CONNECTOR CORD
	2042052027	7P CONNECTOR CORD
	2046040006	12P CONNECTOR CORD
	3934009019	FIP7FBS FLD

PRINTED WIRING BOARD PATTERNS AND PARTS LIST
ETC0730N, ETC0730P CONTROL UNIT

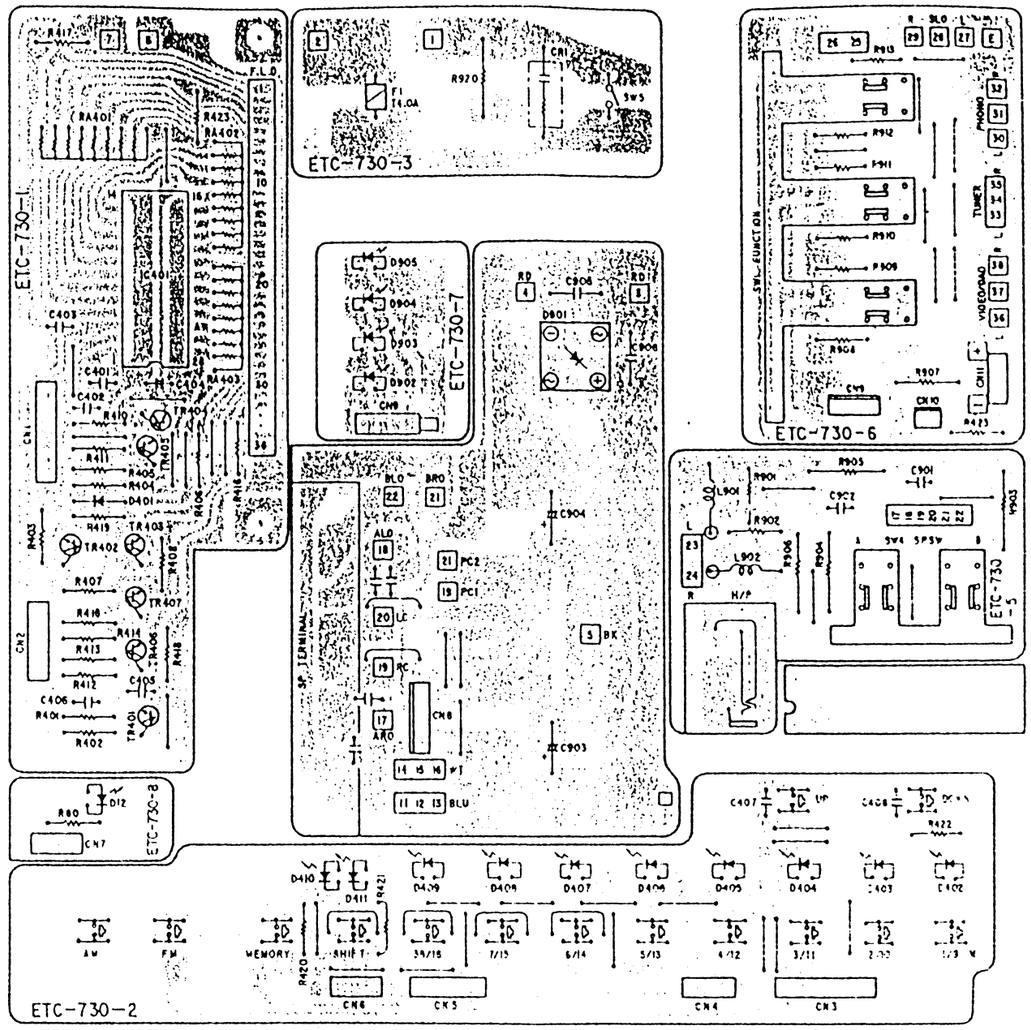

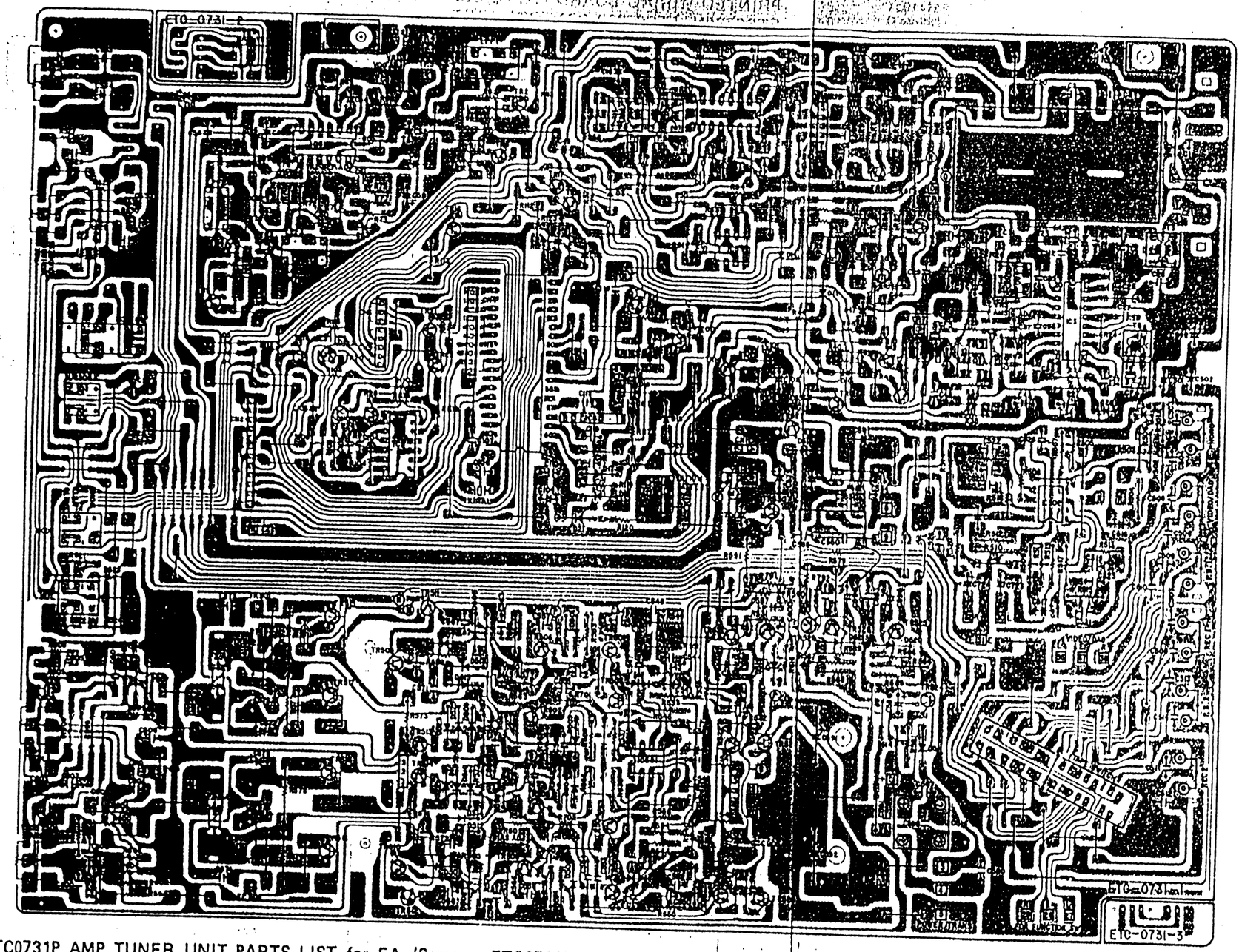

ETC0731N AMP TUNER UNIT PARTS LIST for E2

Ref. No.	Part No.	Part Name & Descriptions	
		SEMICONDUCTORS	
IC001	2630099007	TA-7060AP (TOSHIBA)	IC
IC002	2630083000	HA11225 (HITACHI)	IC
IC003	2630145003	LA1245 (SANYO)	IC
IC004	2630123009	HA-12016 (HITACHI)	IC
IC005	2650030004	NJM4558D-D (JRC)	IC
IC006	2630232000	TD6104P (TOSHIBA)	IC
IC007	2620542104	TC9147BP (TOSHIBA)	IC
IC501	2650030004	NJM4558D-D (JRC)	IC
IC502	2630250008	NJM072DE (JRC)	IC
TR001	2730025023	2SC461(C)	TRANSISTOR
TR002 ~004	2730198015	2SC1815(BL)	TRANSISTOR
TR005	2710102021	2SA1015(GR)	TRANSISTOR
TR006, 007	2730198015	2SC1815(BL)	TRANSISTOR
TR008	2750020008	2SK163(M)	FET
TR009	2730198015	2SC1815(BL)	TRANSISTOR
TR010 ~014	2730294016	2SC1685(R)	TRANSISTOR
TR015	2710102021	2SA1015(GR)	TRANSISTOR
TR016	2730294016	2SC1685(R)	TRANSISTOR
TR017	2710102021	2SA1015(GR)	TRANSISTOR
TR018	2730294016	2SC1685(R)	TRANSISTOR
TR019	2740046005	2SD468A(C)	TRANSISTOR
TR501, 502	2710102005	2SA1015(Y)	TRANSISTOR
TR503, 504	2730198002	2SC1815(Y)	TRANSISTOR
TR505, 506	2710131021	2SA988(E/F)	TRANSISTOR
TR507, 508	2730235020	2SC1841(E/F)	TRANSISTOR
TR509, 510	2730294016	2SC1685(R)	TRANSISTOR
TR511, 512	2740060007	2SD667A(C)	TRANSISTOR
TR513, 514	2720053005	2SB647A(C)	TRANSISTOR
TR515, 516	2730237031	2SC2577(O/Y)	TRANSISTOR
TR517, 518	2710136039	2SA1102(O/Y)	TRANSISTOR
TR521, 522	2730043021	2SC535(C)	TRANSISTOR
TR523	2740088018	2SD1406(Y/GR)	TRANSISTOR
TR524	2730294016	2SC1685(R)	TRANSISTOR
TR525	2730198002	2SC1815(Y)	TRANSISTOR
TR526	2710102005	2SA1015(Y)	TRANSISTOR
TR527	2730294016	2SC1685(R)	TRANSISTOR
TR528	2750043014	2SK381(C/D)	TRANSISTOR
TR529	2710102005	2SA1015(Y)	TRANSISTOR
D001 ~005	2760049011	1S2076A	DIODE
D006, 007	2760302004	SVC321SP-D2	VARACTOR
D008 ~011	2760049011	1S2076A	DIODE
D013, 014	2760049011	1S2076A	DIODE
D015	2760173039	HZ6-B2	ZENER
D016 ~019	2760049011	1S2076A	DIODE
D020	2760218033	HZ9B2	ZENER
D501 ~515	2760049011	1S2076A	DIODE
D516	2760338007	S4VB20F	DIODE

ETC0731P AMP TUNER UNIT PARTS LIST for EA (Same as ETC0731N AMP TUNER UNIT PARTS LIST except the followings.)

Ref. No.	Part No.	Part Name & Descriptions	
		SEMICONDUCTORS	
IC502	2650030004	NJM4558D-D (JRC)	(CHANGE)
TR519, 520	2730198015	2SC1815(BL)	(AD)
		RESISTORS	
R507, 508	2090008120	JUMPER P=10mm USED 2	(CHANGE)
R547, 548	2412092002	1 kohm ±5% 1/4W CARBON	(ADD)
R701, 702	2412068007	100 ohm ±5% 1/4W CARBON	(CHANGE)

Ref. No.	Part No.	Part Name & Descriptions	
		CAPACITORS	
C503, 504	2531024003	0.01μF +80,−20% 50V CERAMIC	(DELETE)
C505 ~514	2533627000	100pF ±5% 50V CERAMIC	(DELETE)
C553, 554	2531024003	0.01μF +80,−20% 50V CERAMIC	(CHANGE)
C555, 556	2533623004	68pF ±5% 50V CERAMIC	(CHANGE)
C559, 560	2533623004	68pF ±5% 50V CERAMIC	(CHANGE)

Ref. No.	Part No.	Part Name & Descriptions	
C903, 904	2531004007	1000pF ±10% 50V CERAMIC	(DELETE)
C951, 952	2531024003	0.01μF +80,−20% 50V CERAMIC	(DELETE)
C971, 972	2531003008	680pF ±10% 50V CERAMIC	(DELETE)
C973, 974	2533633007	180pF ±5% 50V CERAMIC	(DELETE)
C975, 976	2533643000	470pF ±5% 50V CERAMIC	(DELETE)
C983	2531004007	1000pF ±10% 50V CERAMIC	(DELETE)

Ref. No.	Part No.	Part Name & Descriptions	
D518	2760253014	HZ-15-1	ZENER
D519	2760053007	HZ-12A	ZENER
D520, 521	2760256008	HZ-16-2	ZENER
D522 ~525	2760049011	1S2076A	DIODE

RESISTORS (not included Carbon Film ±5%, 1/4W Type)

R001	2110070[illegible]	27ohm	1/2W METAL OXIDE (NB)
R011	2110[illegible]	470ohm	1/2W METAL OXIDE (NB)
R[illegible]	2110[illegible]	680ohm	1/2W CARBON (NB)
R[illegible]	2110[illegible]	100ohm	1/2W CARBON (NB)
R[illegible]	2110[illegible]	100ohm	1/2W CARBON (NB)
R[illegible]	2110[illegible]	470ohm	1/2W CARBON (NB)
R[illegible]	2110[illegible]	470ohm	1/2W CARBON (NB)
R[illegible]	2110[illegible]	0.22ohm	1/2W METAL OXIDE (NB)
R[illegible]	2110[illegible]	220ohm	1/2W METAL OXIDE (NB)
R[illegible]	2110[illegible]	220ohm	1/2W METAL OXIDE (NB)
R[illegible]	2110[illegible]	330ohm	1/2W METAL OXIDE (NB)
VR001	2116000099	2 kohm	SEMI FIXED RESISTOR
VR002	2116000086	200 kohm	SEMI FIXED RESISTOR
VR003	2116000073	20 kohm	SEMI FIXED RESISTOR
VR051	2110432003	VARIABLE RESISTOR 100 kohm	MAIN
VR052	2110433002	VARIABLE RESISTOR 100 kohm	LOUDNESS
VR053	2110434001	VARIABLE RESISTOR 250 kohm	BALANCE
VR054	2110435000	VARIABLE RESISTOR 50 kohm	TREBLE
VR055	2110435013	VARIABLE RESISTOR 250 kohm	BASS
VR501, 502	2116000015	10 kohm	SEMI FIXED RESISTOR

CAPACITORS (not included Ceramic 50V, ±10% Type)

C001	2531004007	0.001μF	±10% 50V CERAMIC
C002, 003	2531024003	0.01μF	+80,−20% 50V CERAMIC
C004	2544132005	10μF	16V ELECTROLYTIC
C005 ~009	2531024003	0.01μF	+80,−20% 50V CERAMIC
C010	2544145005	0.47μF	50V ELECTROLYTIC
C011	2531024003	0.01μF	+80,−20% 50V CERAMIC
C012	2544145005	0.47μF	50V ELECTROLYTIC
C013	2531024003	0.01μF	+80,−20% 50V CERAMIC
C014	2533629008	120pF	±5% 50V CERAMIC
C015	2544145005	0.47μF	50V ELECTROLYTIC
C016	2544136001	100μF	16V ELECTROLYTIC
C017	2544132005	10μF	16V ELECTROLYTIC
C018	2531025002	0.022μF	+80,−20% 50V CERAMIC
C019, 020	2531024003	0.01μF	+80,−20% 50V CERAMIC

Ref. No.	Part No.	Part Name & Descriptions	
C021	2531025002	0.022μF	+80,−20% 50V CERAMIC
C022	2531024003	0.01μF	+80,−20% 50V CERAMIC
C023	2533600001	7pF	±0.5pF 50V CERAMIC
C024 ~027	2531024003	0.01μF	+80,−20% 50V CERAMIC
C028	2544132005	10μF	16V ELECTROLYTIC
C029	2531024003	0.01μF	+80,−20% 50V CERAMIC
C030	2533603008	10pF	±0.5pF 50V CERAMIC
C031	2556089007	390pF	±5% 50V PLASTIC FILM
C032	2531024003	0.01μF	+80,−20% 50V CERAMIC
C033	2551064001	0.0022μF	±10% 50V PLASTIC FILM
C034	2544136001	100μF	16V ELECTROLYTIC
C035	2531024003	0.01μF	+80,−20% 50V CERAMIC
C036	2544132005	10μF	16V ELECTROLYTIC
C037	2544146004	1μF	50V ELECTROLYTIC
C038	2531024003	0.01μF	+80,−20% 50V CERAMIC
C039	2544149001	4.7μF	50V ELECTROLYTIC
C040, 041	2531024003	0.01μF	+80,−20% 50V CERAMIC
C042	2531025002	0.022μF	+80,−20% 50V CERAMIC
C043 ~045	2544136001	100μF	16V ELECTROLYTIC
C046	2541016001	4.7μF	±20% 16V ELECTROLYTIC
C047	2544145005	0.47μF	50V ELECTROLYTIC
C048	2544017007	47μF	16V ELECTROLYTIC
C049 ~051	2544148002	3.3μF	50V ELECTROLYTIC
C052	2544163029	470μF	±20% 16V ELECTROLYTIC
C053	2544148002	3.3μF	50V ELECTROLYTIC
C054	2544146004	1μF	50V ELECTROLYTIC
C055	2551080001	0.047μF	±10% 50V PLASTIC FILM
C056	2544149001	4.7μF	50V ELECTROLYTIC
C057	2556099000	1000pF	±5% 50V CERAMIC
C058	2544148002	3.3μF	50V ELECTROLYTIC
C059, 060	2544133004	22μF	16V ELECTROLYTIC
C061, 062	2551120013	0.0012μF	±5% 50V PLASTIC FILM
C063, 064	2544148002	3.3μF	50V ELECTROLYTIC
C066 ~068	2531024003	0.01μF	+80,−20% 50V CERAMIC
C101	2531024003	0.01μF	+80,−20% 50V CERAMIC
C102	2544019005	220μF	16V ELECTROLYTIC
C106, 107	2533133002	33pF	±5% 50V CERAMIC
C108	2544090008	2200μF	6.3V ELECTROLYTIC
C109	2544006005	470μF	6.3V ELECTROLYTIC
C110 ~113	2531024003	0.01μF	+80,−20% 50V CERAMIC
C114, 115	2544147003	2.2μF	50V ELECTROLYTIC
C116, 117	2531024003	0.01μF	+80,−20% 50V CERAMIC
C118	2544129005	47μF	10V ELECTROLYTIC
C119 ~121	2531024003	0.01μF	+80,−20% 50V CERAMIC
C122	2533633007	180pF	±5% 50V CERAMIC
C501, 502	2544146004	1μF	50V ELECTROLYTIC
C503, 504	2531004007	1000pF	±10% 50V CERAMIC (FTZ)
C505 ~514	2533627000	100pF	±5% 50V CERAMIC (FTZ)
C515, 516	2544132005	10μF	16V ELECTROLYTIC
C517, 518	2544127005	220μF	6.3V ELECTROLYTIC

Ref. No.	Part No.	Part Name & Descriptions	
C519, 520	2554178004	0.024μF	±5% 50V PLASTIC FILM
C521, 522	2551121009	0.0068μF	±5% 50V PLASTIC FILM
C525, 526	2531024003	0.01μF	+80,−20% 50V CERAMIC
C527, 528	2549014018	0.22μF	±20% 50V ELECTROLYTIC
C529, 530	2533645008	560pF	±5% 50V CERAMIC
C531, 532	2551076002	0.022μF	±10% 50V PLASTIC FILM
C533 ~536	2544146004	1μF	50V ELECTROLYTIC
C537, 538	2533627000	100pF	±5% 50V CERAMIC
C539, 540	2533603008	10pF	±0.5pF 50V CERAMIC
C541, 542	2544132005	10μF	16V ELECTROLYTIC
C543, 544	2531024003	0.01μF	+80,−20% 50V CERAMIC
C545 ~548	2531025002	0.022μF	+80,−20% 50V CERAMIC
C549 ~552	2533631009	150pF	±5% 50V CERAMIC
C557, 558	2531025002	0.022μF	+80,−20% 50V CERAMIC
C559, 560	2533631009	150pF	±5% 50V CERAMIC
C561, 562	2531025002	0.022μF	+80,−20% 50V CERAMIC
C563 ~566	2533631009	150pF	±5% 50V CERAMIC
C567 ~570	2533637003	270pF	±5% 50V CERAMIC
C571, 572	2531024003	0.01μF	+80,−20% 50V CERAMIC
C573, 574	2531027000	0.1μF	+80,−20% 50V CERAMIC
C575 ~580	2544146004	1μF	50V ELECTROLYTIC
C586	2544146004	1μF	50V ELECTROLYTIC
C587 ~590	2531052004	4700pF	+100,−0% 500V CERAMIC
C591, 592	2546030024	5600μF	±20% 50V ELECTROLYTIC
C593, 594	2531024003	0.01μF	+80,−20% 50V CERAMIC
C595, 596	2544138009	47μF	25V ELECTROLYTIC
C597	2544136001	100μF	16V ELECTROLYTIC
C599, 600	2551074004	0.015μF	±10% 50V ELECTROLYTIC
C601, 602	2551070008	0.0068μF	±10% 50V PLASTIC FILM
C603, 604	2533633007	180pF	±5% 50V CERAMIC
C605, 606	2551081000	0.056μF	±10% 50V PLASTIC FILM
C607, 608	2551085006	0.12μF	±10% 50V PLASTIC FILM
C609, 610	2551061004	0.0012μF	±10% 50V PLASTIC FILM
C621, 622	2531024003	0.01μF	+80,−20% 50V CERAMIC
C723, 724	2544132005	10μF	16V ELECTROLYTIC

Ref. No.	Part No.	Part Name & Descriptions	
C795 ~800	2531024003	0.01μF	+80,−20% 50V CERAMIC
C903, 904	2531004007	1000pF	±10% 50V CERAMIC (FTZ)
C951 ~954	2531024003	0.01μF	+80,−20% 50V CERAMIC (FTZ)
C971, 972	2531003008	680pF	±10% 50V CERAMIC (FTZ)
C973, 974	2533633007	180pF	±5% 50V CERAMIC (FTZ)
C975, 976	2533643000	470pF	±5% 50V CERAMIC (FTZ)
C983	2531004007	1000pF	±10% 50V CERAMIC
TC001, 002	2130022008	TRIMMER CONDENCER	

OTHER PARTS

	2221082203	P.W. BOARD USED 1
	2090008146	JUMPER WIRE P=5mm USED 4
	2090008120	JUMPER WIRE P=10mm USED 121
	2090008162	JUMPER WIRE P=20mm USED 1
	EP-5667H1	TERMINAL PIN USED 44
T001	2312901002	FM. IF. DET (A)
T002	2312902001	FM. IF. DET (B)
T003	2311061008	MW ANT. TRANS
T004	2311076103	MW OSC COIL
T005	2310056001	AM IFT
LP001	2320056004	ANTI BIRDIE FILTER
LP002, 003	2320041006	LOW PASS FILTER
CF001	2610023006	FM CERAMIC FILTER
CF002	2610038004	FM CERAMIC FILTER
CF003	2610023006	FM CERAMIC FILTER
CF004	2610034008	AM CERAMIC FILTER (SEP450H)
CF005	2610031001	AM CERAMIC FILTER (BFU450C4)
	3990008038	X-TAL (7.2MHz)
	2124254002	SLIDE SW (REMOTE)
	2124502000	2P PUSH SWITCH
	4170233004	RADIATOR BLOCK
	4140240001	EARTH PLATE USED 2
	2020022008	FUSE HOLDER USED 4
F002, 003	2061015087	FUSE (4.0A) USED 2
	2160048007	FRONT END
	2050185038	3P WIRE HOLDER USED 10
	2050133022	2P NH CONNECTOR BASE USED 2
CN003	2050133077	7P NH CONNECTOR BASE
CN005	2050133051	5P NH CONNECTOR BASE USED 2
	2050167027	12P NH CONNECTOR BASE
	2050152003	6P CONNECTOR BASE USED 2
	2050208009	3P NJ ANT. TERMINAL
	4700012022	PAN SCREW WITH W. SW 3x12 USED 4
	4730020005	TAPPING SCREW (S) 3x6 USED 2
	4159001008	F. S WASHER USED 2
L001	2350015043	INDUCTOR 2.2mH
	For FTZ Parts	
	205003107	3T LUG
	5130716036	FTZ LABEL

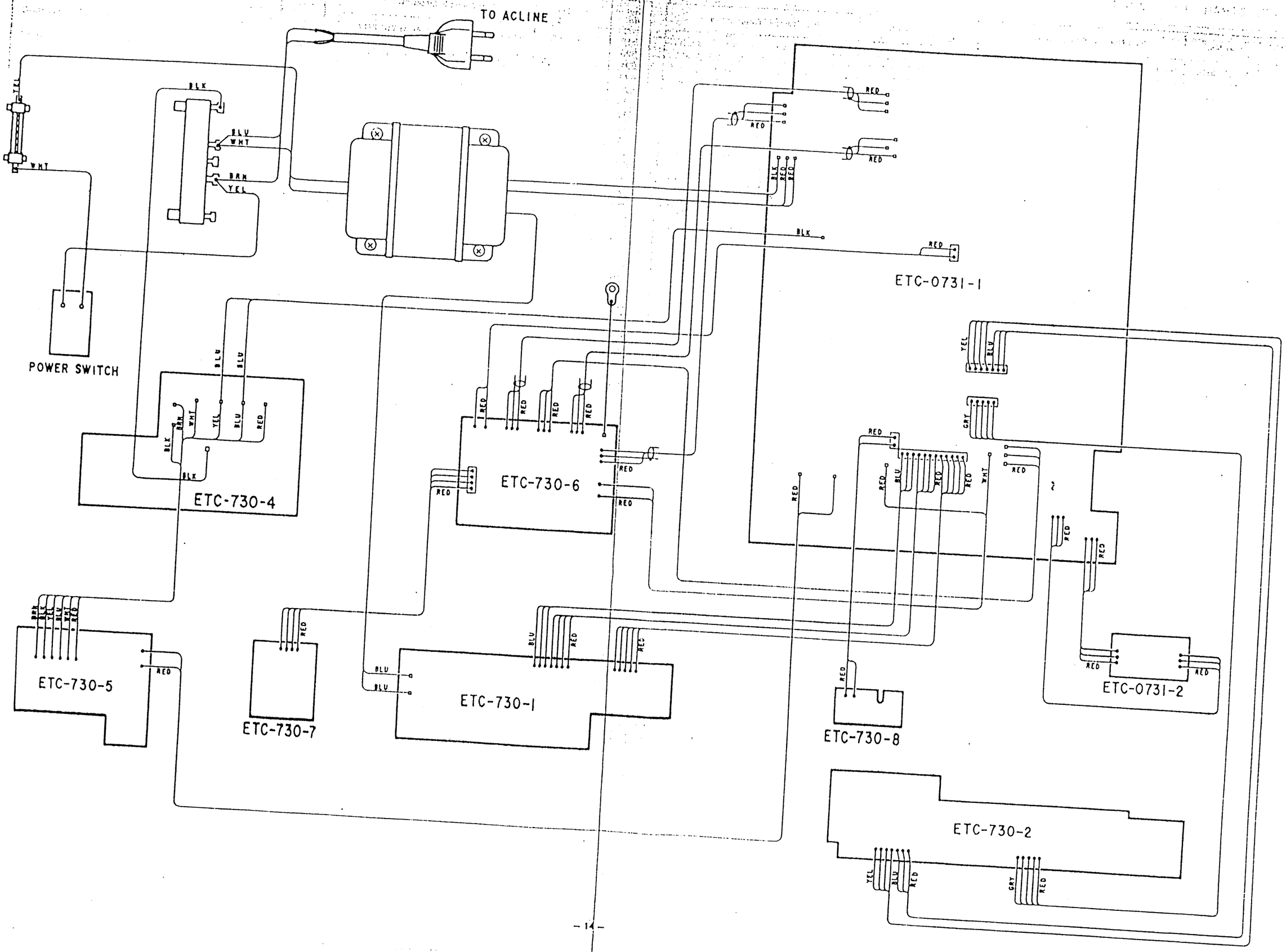
TO ACLINE
POWER SWITCH
ETC-730-4
ETC-730-6
ETC-0731-1
ETC-730-5
ETC-730-7
ETC-730-1
ETC-730-8
ETC-0731-2
ETC-730-2

CONNECTION DIAGRAM
(This figure is the specifications of EA.)

EA VERSION

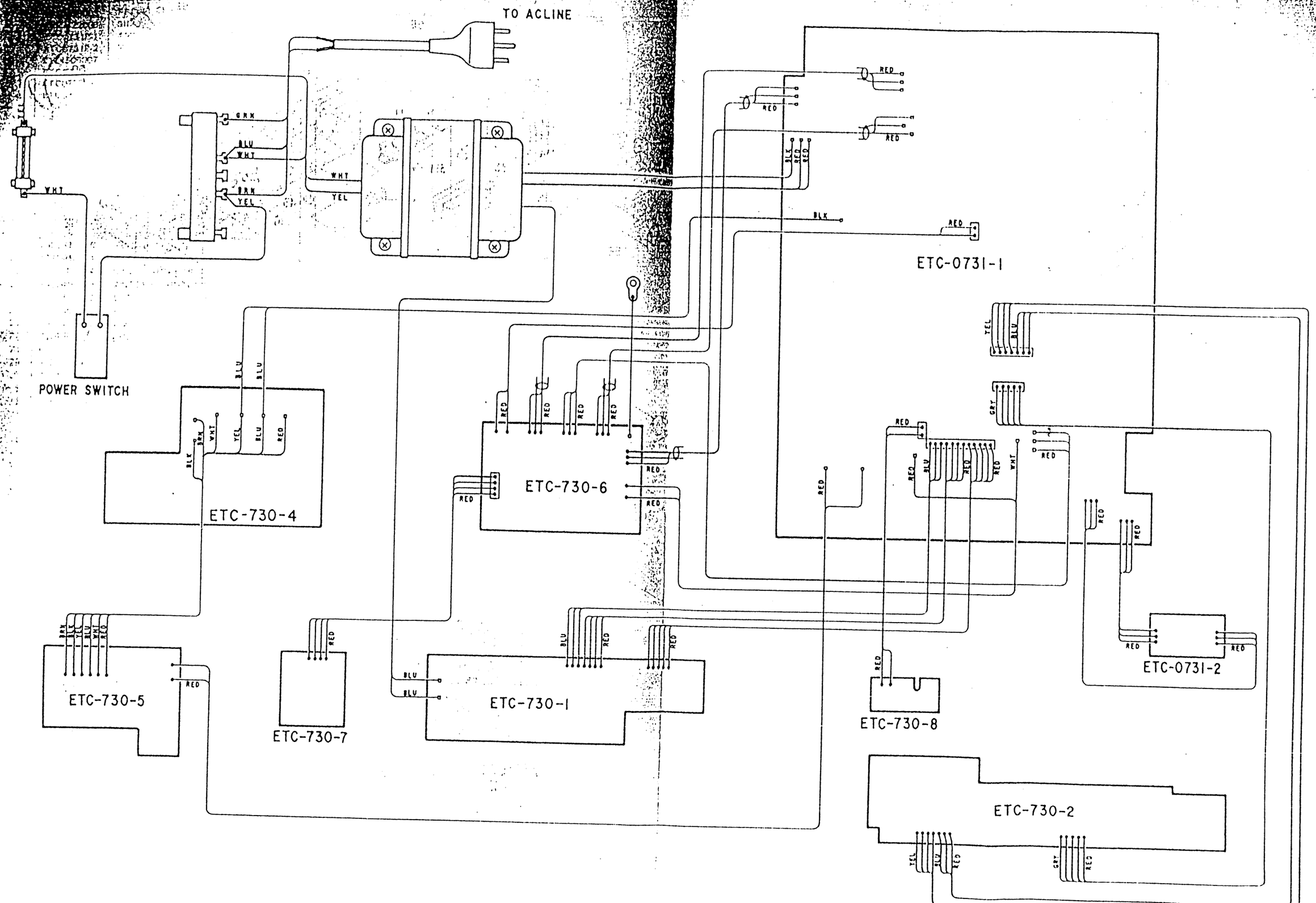

EXPLODED VIEW OF CHASSIS AND CABINET
(This figure is the specifications of EA).

(EA VERSION

⚠ ▩ Means important safety item, which must be replaced, when necessary, by a part specified or meeting the specification by the manufacturer.

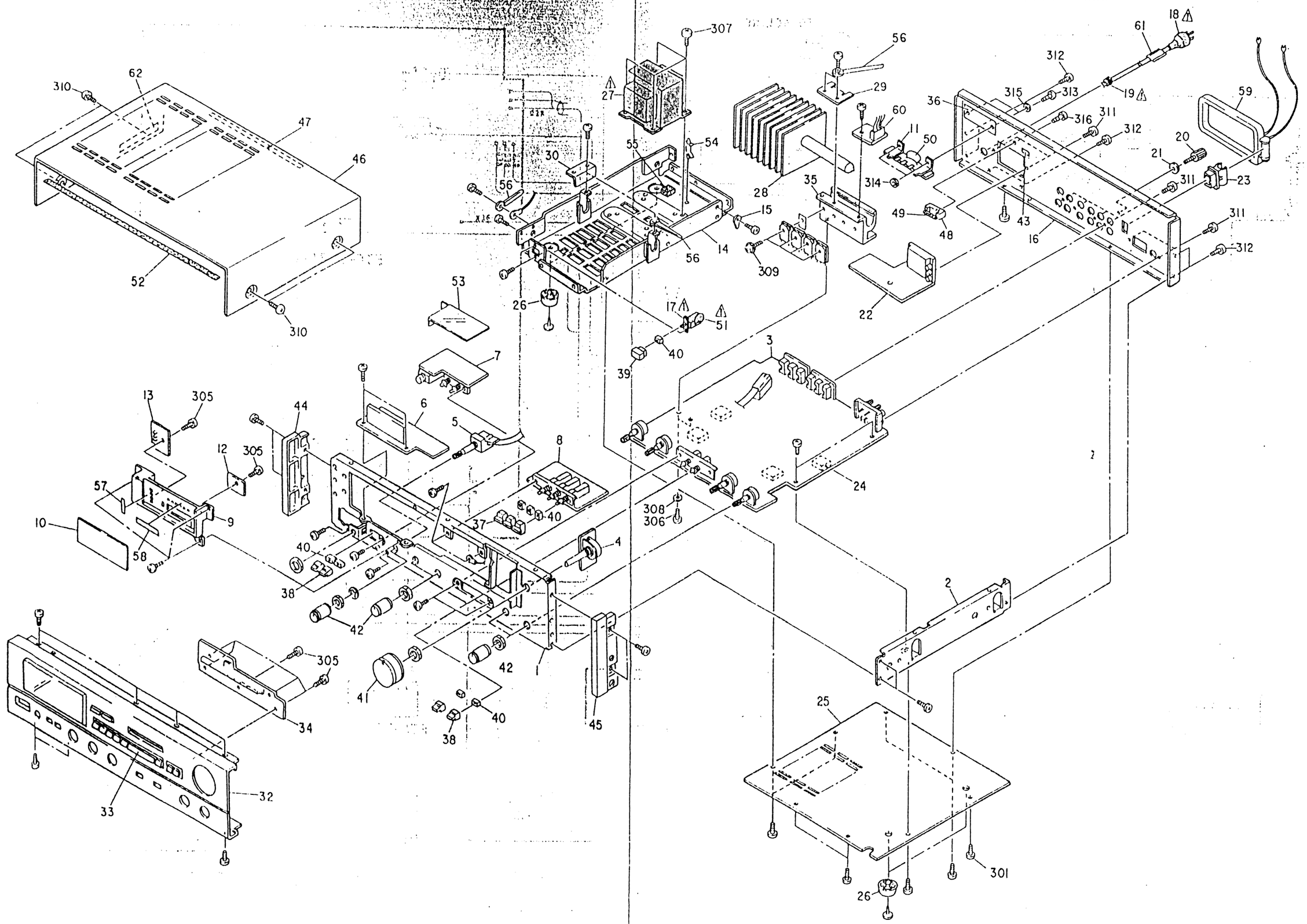

EXPLODED VIEW OF CHASSIS AND CABINET
(This figure is the specifications of E2).

E2 VERSION

⚠ when ne
by the m

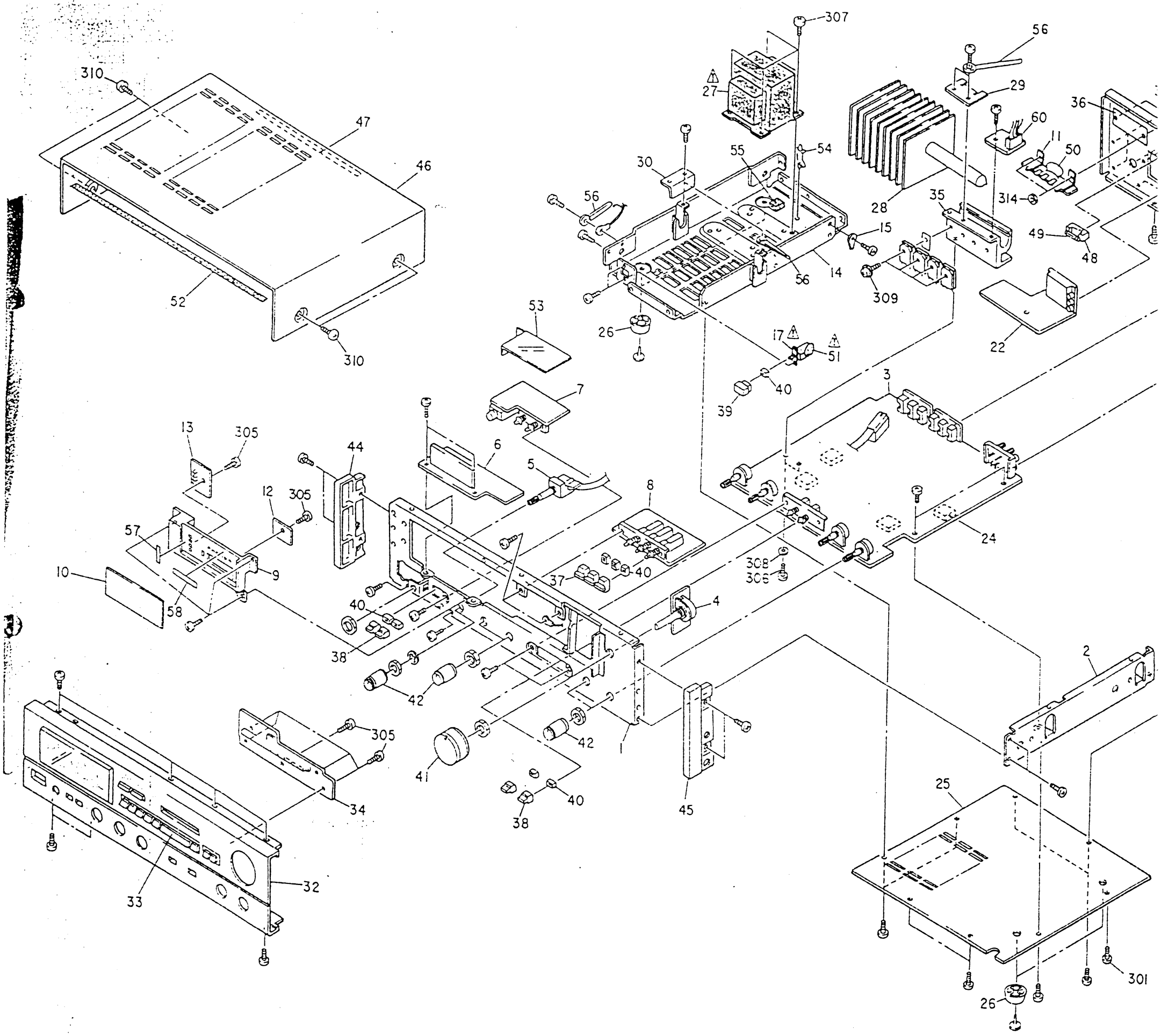

EXPLODED VIEW OF CHASSIS AND CABINET PARTS LIST (GOLD VERSION for E2)

Ref. No.	Part No.	Part Name & Descriptions
1	4110430003	FRONT CHASSIS ASS'Y
2	4110422008	SIDE CHASSIS
3	ETC0731N-1	AMP. TUNER UNIT
4	ETC0731N-2	MAIN VR UNIT
5	2124505007	ROTARY REMOTE SW
6	ETC0730N-1	FLD UNIT
7	ETC0730N-5	SP SW & H.P UNIT
8	ETC0730N-6	FUNCTION SW UNIT
9	1460695203	LED HOLDER
10	1430370118	INDICATION SHEET
11	2050089008	7P W TERMINAL
12	ETC0730N-8	SIGNAL UNIT
13	ETC0730N-7	F. LED UNIT
14	4110424200	TRANS CHASSIS ASS'Y
15	2050003107	3T LUG
16	1059011007	BACK PANEL
17	[illegible]	POWER SW TOP
18	[illegible]	AC CORD
19	[illegible]	CORD BUSH
20	2050071016	TERMINAL ASS'Y
21	4770018001	WASHER (P-87)
22	ETC0730N-4	SP TERMINAL UNIT
23	1460494006	ANTENNA HOLDER
24	4610114023	CUSHION USED 4
25	1050608011	BOTTOM COVER

Ref. No.	Part No.	Part Name & Descriptions
26	1040111000	FOOT USED 4
⚠A27	2335444009	POWER TRANS.
28	4170213200	H.P RADIATOR
29	4121646006	RADIATOR BRACKET
30	4121648004	BRACKET USED 2
*31	4450033005	WIRE CLAMP BAND USED 13
*32	1441241206	FRONT PANEL ASS'Y
*33	1130599105	PUSH KNOB ASS'Y FOR TU. MEMORY
34	ETC0730N-2	KEY LED UNIT
35	4170233004	RADIATOR BLOCK
36	4150088004	INSULATING SHEET
*37	1130604113	PUSH KNOB FOR FUNCTION
*38	1130536032	PUSH KNOB (B) FOR SP, AM, MUT
*39	1130515314	PUSH KNOB (A) FOR POWER
40	1140056007	FLEXIBLE RING USED 8
*41	1120458117	KNOB ASS'Y FOR MAIN VR
*42	1120459116	KNOB ASS'Y FOR TONE, TAPE
43	5130886005	FUSE LABE (T2A)
*44	1460338230	ESC PLATE (L)
*45	1460339239	ESC PLATE (R)
*46	1020178115	TOP COVER
47	1220095014	SPACER
48	2020013101	FUSE HOLDER
[illegible]	[illegible]	[illegible]
[illegible]	[illegible]	[illegible]

Ref. No.	Part No.	Part Nam
⚠C1	2538003014	CERAMIC CAP
52	1220095001	SPACER
53	4150287009	ISOLATION SHE
54	4150228000	PCB HOLDER
55	4610114007	CUSHION
56	EP-4772	CORD HOLDER
57	1439003004	BLIND SHEET
58	1439003017	BLIND SHEET
59	2311060009	LOOP ANTENN
60	ETC0731N-3	TR UNIT
PACKING & ACCESSORIES (not includ		
a.	5058092049	LAMINATE EN
b.	5030448103	CUSHION
*c.	5019103058	CARTON CASE
d.	5050061007	ENVELOPE
e.	5119108102	INST. MANUAL

mportant safety item, which must be replaced, by a part specified or meeting the specification irer.

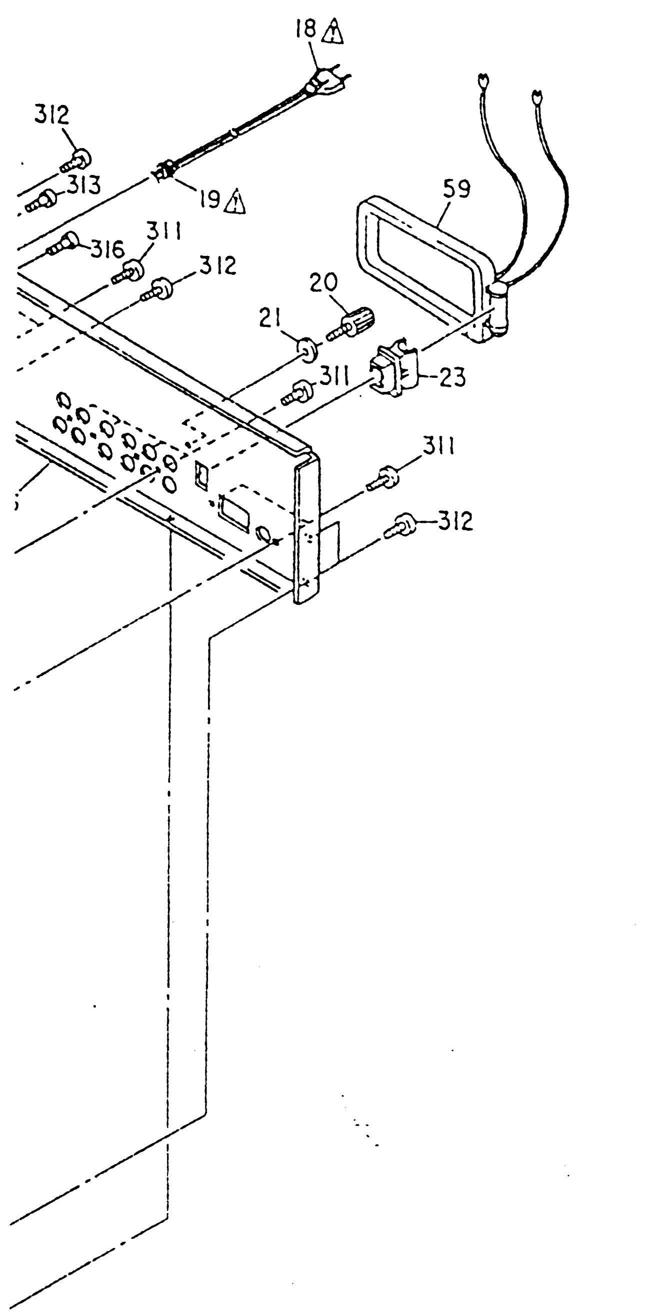

EXPLODED VIEW OF CHASSIS AND CABINET PARTS LIST for EA

Ref. No.	Part No.	Part Name & Descriptions
1	4110430003	FRONT CHASSIS ASS'Y
2	4110422008	SIDE CHASSIS
3	ETC0731P-1	AMP. TUNER UNIT
4	ETC0731P-2	MAIN VR UNIT
5	2124505007	ROTARY REMOTE SW
6	ETC0730P-1	FLD UNIT
7	ETC0730P-5	SP SW & H.P UNIT
8	ETC0730P-6	FUNCTION SW UNIT
9	1460695203	LED HOLDER
10	1430370118	INDICATION SHEET
11	2050089008	7P W TERMINAL
12	ETC0730P-8	SIGNAL UNIT
13	ETC0730P-7	F. LED UNIT
14	4110424200	TRANS CHASSIS ASS'Y
15	–	–
16	1059011007	BACK PANEL
[redacted]		
20	2050071016	TERMINAL ASS'Y
21	4770018001	WASHER (P-87)
22	ETC0730P-4	SP TERMINAL UNIT
23	1460494006	ANTENNA HOLDER
24	4610114023	CUSHION USED 4
25	1050608011	BOTTOM COVER
26	1040111000	FOOT USED 4
[redacted]		
28	4170231200	H.P RADIATOR
29	4121646006	RADIATOR BRACKET
30	4121648004	BRACKET USED 2
*31	4450033005	WIRE CLAMP BAND USED 13
32	1441241206	FRONT PANEL ASS'Y
33	1130599105	PUSH KNOB ASS'Y FOR TU. MEMORY
34	ETC0730P-2	KEY LED UNIT
35	4170233004	RADIATOR BLOCK
36	4150088004	INSULATING SHEET
37	1130604113	PUSH KNOB FOR FUNCTION
38	1130536032	PUSH KNOB (B) FOR SP, AM, MUT
39	1130515134	PUSH KNOB (A) FOR POWER
40	1140056007	FLEXIBLE RING USED 8
41	1120458117	KNOB ASS'Y FOR MAIN VR
42	1120459116	KNOB ASS'Y FOR TONE, TAPE
43	5130886005	FUSE LABEL (T2A)
44	1460338230	ESC PLATE (L)
45	1460339239	ESC PLATE (R)
46	1020178115	TOP COVER
47	1220095014	SPACER
48	2020013101	FUSE HOLDER
[redacted]		
52	1220095001	SPACER
53	4150287009	ISOLATION SHEET
54	4150228000	PCB HOLDER
55	4610114007	CUSHION
56	EP-4772	CORD HOLDER
57	1439003004	BLIND SHEET
58	1439003017	BLIND SHEET
59	2311060009	LOOP ANTENNA
60	ETC0731P-3	TR UNIT
61	5130210008	NOTICE SHEET
62	5130209006	NOTICE SHEET
63		
64		

Ref. No.	Part No.	Part Name & Descriptions
PACKING & ACCESSORIES (not included EXPLODED VIEW)		
a.	5058092049	LAMINATE ENVELOPE
b.	5030448103	CUSHION
c.	5010999096	CARTON CASE
d.	5050061007	ENVELOPE
e.	5119108102	INST. MANUAL

Ref. No.	Part No.	Part Name & Descriptions	Q'ty
SCREWS, NUTS & WASHERS			
301	4737002005	TAPPING SCREW (S) 3x6	43
302	–	NUT M7 (SP)	6
303	–	TOOTHED WASHER φ7 (SP)	1
304	–	NUT M12 (SP)	1
305	4737500015	TAPPING SCREW (P) 3x8	7
306	4737002018	TAPPING SCREW (S) 3x8	2
307	4737004003	TAPPING SCREW (S) 4x8	4
308	4159001008	F.S. WASHER	2
309	4700012022	PAN SCREW WITH W.S.W 3x12	4
310	4734801005	TAPPING SCREW (TURS) 4x8	4
311	4737500044	TAPPING SCREW (P) 3x8 (BLACK)	8
312	4737002034	TAPPING SCREW (S) 3x6 (BLACK)	6
313	4700042005	PAN SCREW WITH S.W 3x8 (BLACK)	2
314	4756006008	NUT M3	2
315	4753001051	TOOTHED WASHER φ3	2
316	4734453039	TAPPING SCREW 4x6 BLACK	1

Note: * Mark is not included EXPLODED VIEW.

Descriptions
[redacted]
:PLODED VIEW)
)PE

Ref. No.	Part No.	Part Name & Descriptions	Q'ty
SCREWS, NUTS & WASHERS			
*301	4737002005	TAPPING SCREW (S) 3x6	43
302	–	NUT M7 (SP)	6
303	–	TOOTHED WASHER φ7 (SP)	1
304	–	NUT M12 (SP)	1
305	4737500015	TAPPING SCREW (P) 3x8	7
306	4737002018	TAPPING SCREW (S) 3x8	2
307	4737004003	TAPPING SCREW (S) 4x8	4
308	4159001008	F.S. WASHER	2
309	4700012022	PAN SCREW WITH W. SP W 3x12	4
*310	4734801005	TAPPING SCREW (TRUS) 4x8	4
311	4737500044	TAPPING SCREW (P) 3x8 (BLACK)	8
312	4737002034	TAPPING SCREW (S) 3x6 (BLACK)	6
313	4700042005	PAN SCREW WITH S.W 3x8 (BLACK)	2
314	4756005008	NUT M3	2
315	4753001051	TOOTHED WASHER φ3	2
316	4734453039	TAPPING SCREW 4x6 (BLACK)	1

Note: * Mark is not included EXPLODED VIEW.

BLACK VERSION PARTS LIST
(Same as GOLD VERSION except the followings)

Ref. No.	Part No.	Part Name & Descriptions
32	1441242219	FRONT PANEL ASS'Y
33	1130599118	PUSH KNOB ASS'Y FOR TU. MEMORY
37	1130604126	PUSH KNOB FOR FUNCTION
38	1330536045	PUSH KNOB (B) FOR SP, AM, MUT
39	1130515121	PUSH KNOB (A) FOR POWER
41	1120458133	KNOB ASS'Y FOR MAIN VR
42	1120459132	KNOB ASS'Y FOR TONE, TAPE
44	1460338243	ESC PLATE (L)
45	1460339242	ESC PLATE (R)
46	1020178131	TOP COVER
310	4734454038	TAPPING SCREW (2) 4x8 USED 4
c.	5010999067	CARTON CASE

WIRING DIAGRAM

⚠ ▨ Means important safety item, which must be replaced, when necessary, by a part specified or meeting the specification by the manufacturer.

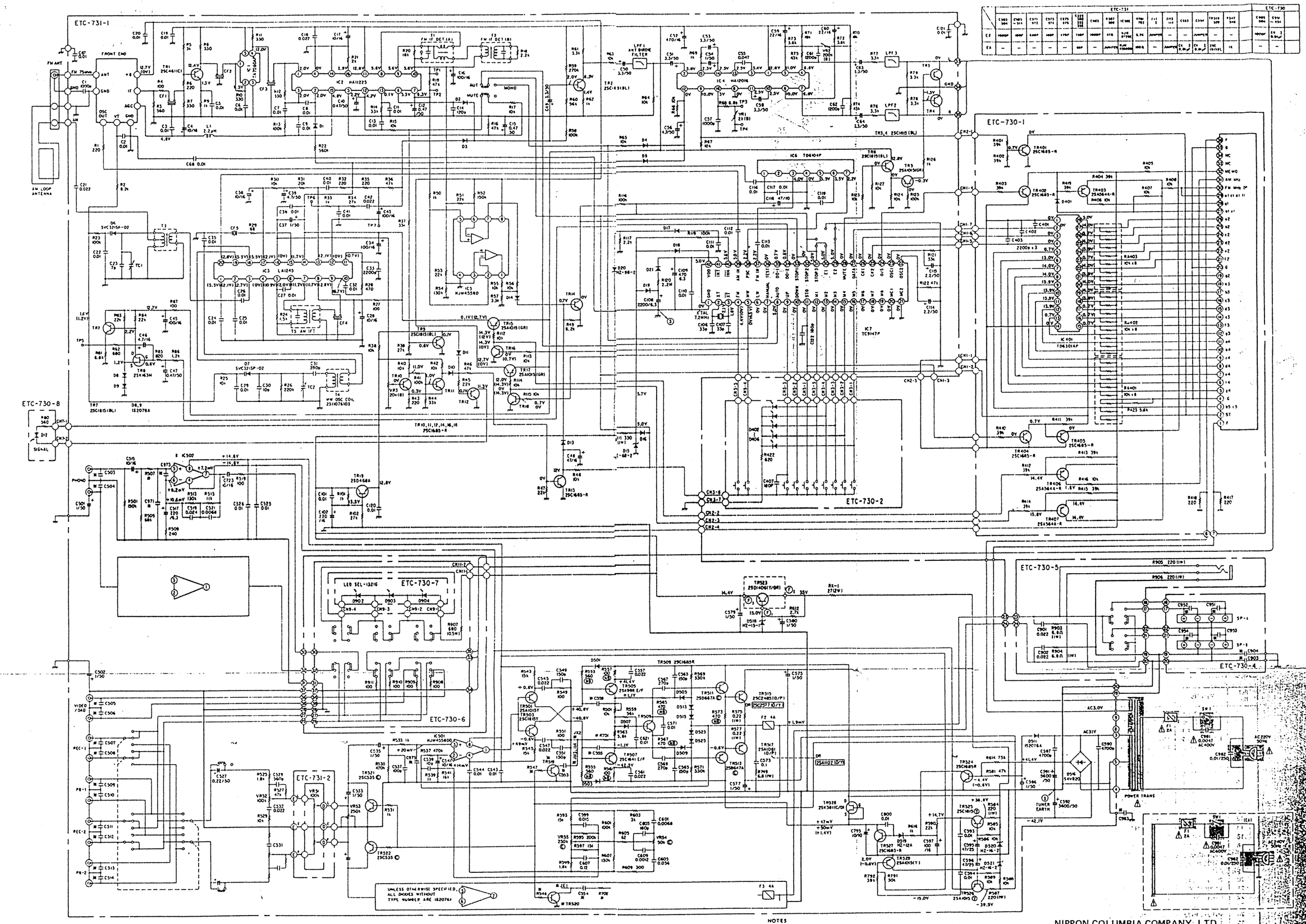

NOTES
ALL RESISTANCE VALUES IN OHM K = 1,000 OHM M = 1,000,000 OHM
ALL CAPACITANCE VALUES IN MICRO FARAD P = MICRO-MICRO FARAD
EACH VOLTAGE AND CURRENT ARE MEASURED AT NO SIGNAL INPUT CONDITION.
CIRCUIT AND PARTS ARE SUBJECT TO CHANGE WITHOUT PRIOR NOTICE.

NIPPON COLUMBIA COMPANY, LTD.
No. 14-14, AKASAKA 4-CHOME, MINATO-KU, TOKYO, JAPAN
Telephone: Tokyo (584) 8111
Cable: NIPPONCOLUMBIA TOKYO Telex: JAPANOLA J22591
Printed in Japan

WIRING DIAGRAM (For E2)

⚠ Means important safety item, which must be replaced, when necessary, by a part specified or meeting the specification by the manufacturer.

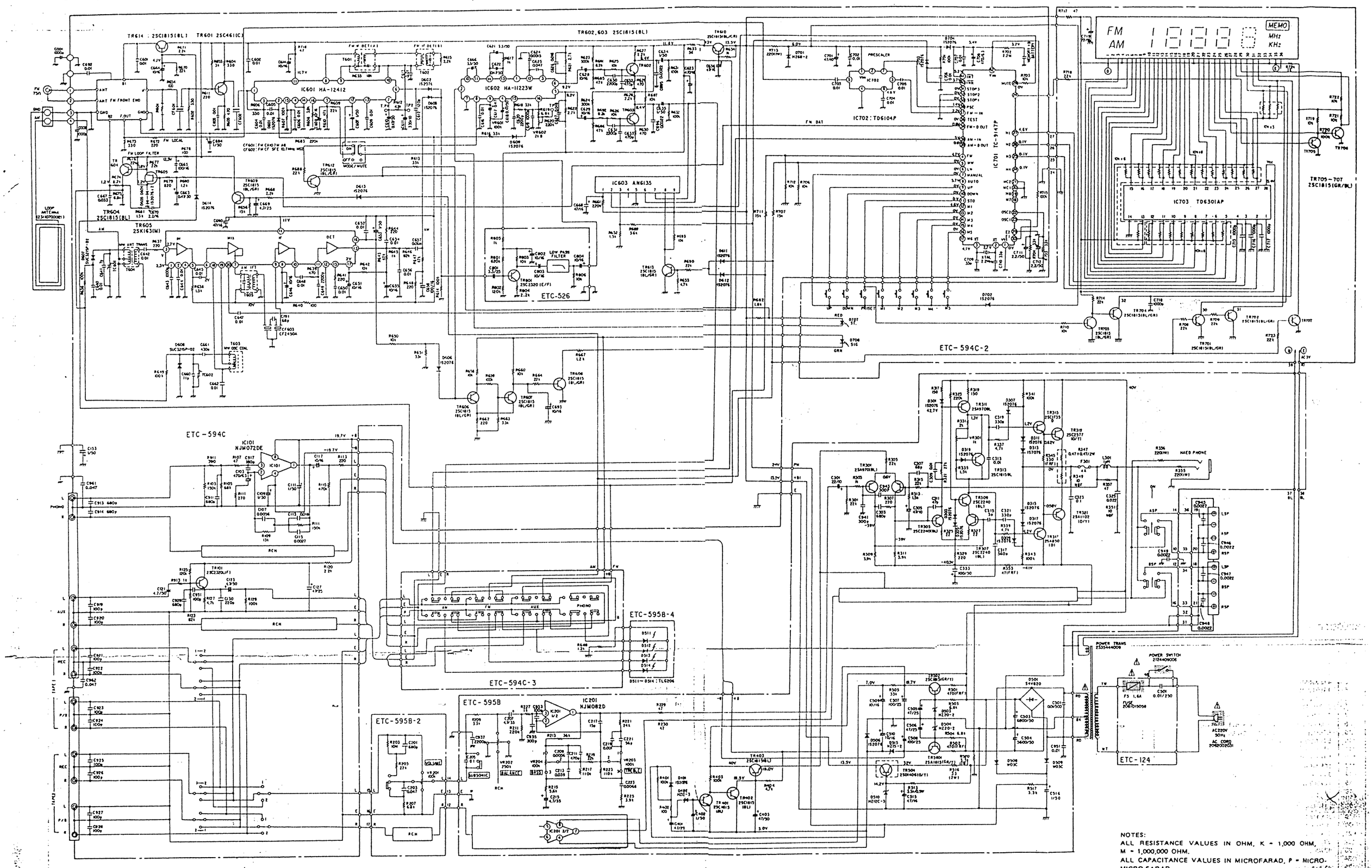

NOTES:
ALL RESISTANCE VALUES IN OHM, K = 1,000 OHM, M = 1,000,000 OHM.
ALL CAPACITANCE VALUES IN MICROFARAD, P = MICRO-MICRO FARAD.
EVERY VOLTAGES AND CURRENTS IS MEASURED AT NO SIGNAL INPUT CONDITION.
CIRCUIT AND PARTS ARE SUBJECT TO CHANGE WITHOUT PRIOR NOTICE.

EXPLODED VIEW OF CHASSIS AND CABINET
(This figure is the specifications of EA.)

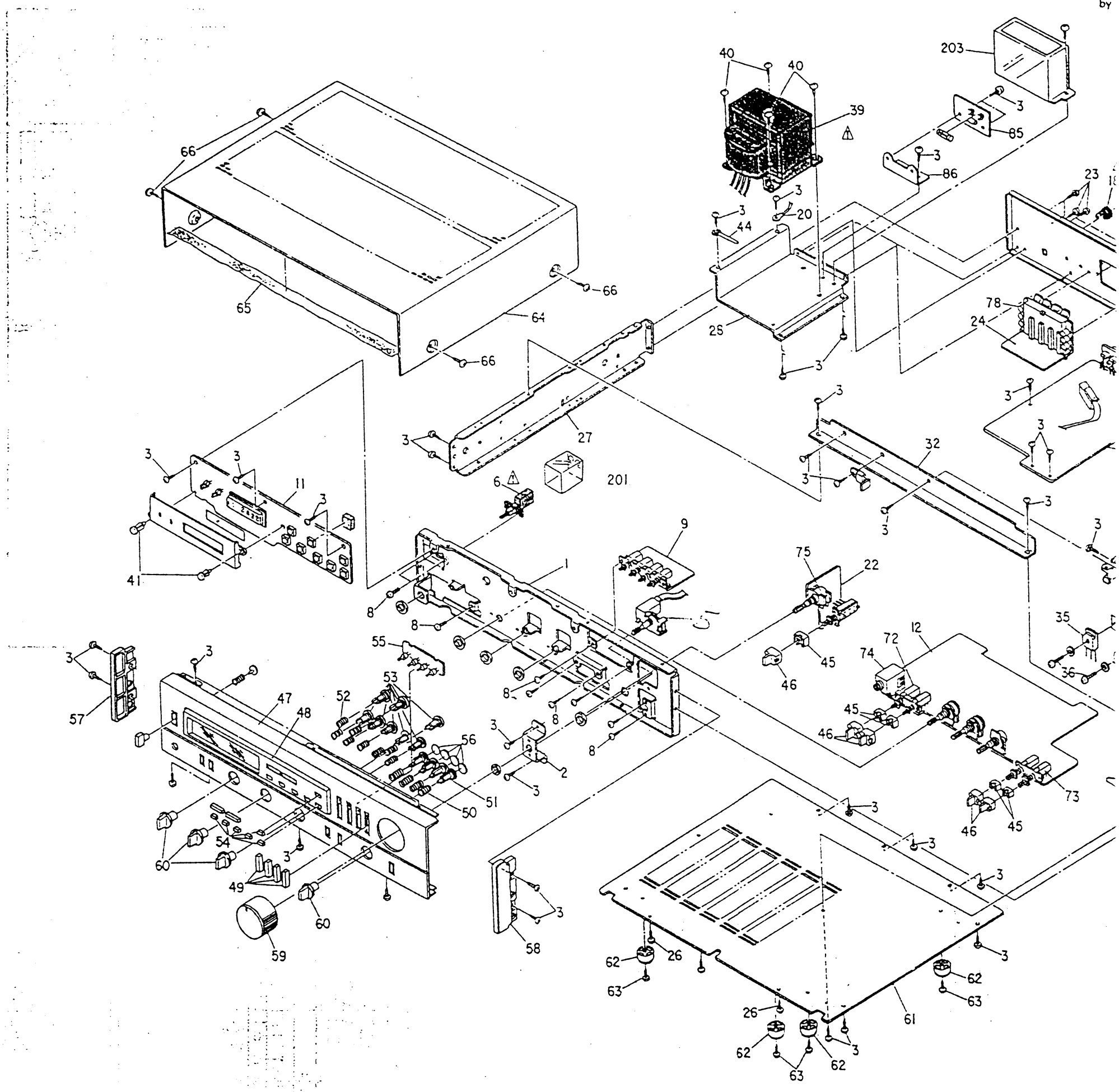

EXPLODED VIEW OF CHASSIS AND CABINET

Note: 1. See addendum list below for the parts with asterisk (*) on the Ref. No. and the other parts not included in the list.
2. *mark is not included EXPLODED VIEW.
3. This list is prepared based on E2.

Ref. No.	Part No.	Part Name & Descriptions
1	4110382203	FRONT CHASSIS
2	4120763003	VOLUME BRACKET
3	4730354019	TAPPING SCREW (2) 3x8
4	4610121016	CUSHION
5	2120169023	ROTARY REMOTE (A)
6	2124409006	POWER SWITCH
*7	ETC0594C-1	EQ. & TUNER UNIT
8	4700009006	PAN SCREW WITH S. WASHER 3x6
*9	ETC0594C-3	EQ. & TUNER UNIT
*10	ETC0595B-5	AMP. UNIT
*11	ETC0594C-2	EQ. & TUNER UNIT
*12	ETC0595B-1	AMP. UNIT
*13	1050497031	BACK PANEL
14	2050071016	TERMINAL ASS'Y
15	4770018001	WASHER (P-87)
16	1460262005	ANTENNA HOLDER
[illegible]	[illegible]	[illegible]
[illegible]	[illegible]	[illegible]
19	2050165003	2P TERMINAL
20	2050003107	3T LUG
*21	2531004007	CERAMIC CAP. 1000pF/50V
*22	ETC0595B-2	AMP. UNIT
23	4770064107	FIXING SCREW
24	–	–
25	4120990009	PCB BRACKET (L)
26	4730355018	TAPPING SCREW (1) 3x10
27	4110216803	SIDE CHASSIS
28	4120767708	TRANS BRACKET
29	–	–

Ref. No.	Part No.	Part Name & Descripitions
30	–	–
31	–	–
32	4110383008	CHASSIS FRAME
33	4170196109	POWER RADIATOR
34	2710136039	TRANSISTOR 2SA1102(O/Y)
35	2730237031	TRANSISTOR 2SC2577(O/Y)
36	4700012022	PAN SCREW WITH S.W. W 3x12
37	4121302007	RADIATOR BRACKET
38	4121301008	FIX. BRACKET
39	[illegible]	[illegible]
40	4734454038	TAPPING SCREW (TRUS) 4x8
41	4770096007	PUSH RIVET
42	3940005007	LITIUM BATTERY
*43	4450033005	WIRE CLAMP BAND USED 7
44	EP-6214	CORD HOLDER
45	1140056007	FLEXIBLE RING
46	1130319220	PUSH KNOB
47	1441103400	FRONT PANEL ASS'Y
48	1460482102	CONTROL PANEL ASS'Y
49	1130223015	PUSH KNOB (A)
50	4630182051	SPRING
51	1198005107	STOPPER
52	4630182048	SPRING
53	1190030002	STOPPER (B)
54	1130213041	PUSH KNOB (A)
*55	ETC05958-4	AMP. UNIT
56	1040034006	STOPPER
57	1460338117	ESC PLATE (L)
58	1460339116	ESC PLATE (R)

Ref. No.	Part No.	Part Name & Descriptions
59	1120312101	KNOB (A)
60	1120332068	KNOB
61	1050541107	BOTTOM COVER
62	1048001002	FOOT
63	SC-06271	FIX. SCREW
64	1020152005	TOP COVER
65	1220095001	SPACER
66	4734801005	TAPPING SCREW (TRUS) 4x8 (MFCP
67	–	–
68	–	–
69	2311060009	LOOP ANTENNA
*70	5130364006	CAUTION SHEET
71	–	–
72	2120225006	2P PUSH SW (ETC0595)
73	2120226005	2P PUSH SW (ETC0595)
74	2048047007	HEAD PHONE JACK (ETC0595)
75	2110251006	VARIABLE RESISTOR 100 kohm (ETC0595)
76	2061015087	FUSE (4A) (ETC0595)
77	–	–
78	2050188006	8P PUSH TERMINAL
79	2160048007	FRONT END (ETC0594)
80	2124253003	PUSH SWITCH (EVQ PXR) (ETC0594
81	2124254002	SLIDE SWITCH (REMOTE) (ETC0594
82	2050164004	ANTENNA ADAPTOR
83	4711203037	PAN SCREW 2.6x6 (BLACK)
84	4756004000	NUT M2.6 (BLACK)
85	ETC0124G	POWER SOURCE UNIT
86	4120584004	BRACKET (A)

ens important safety item, which must be replaced, ssary, by a part specified or meeting the specification ufacturer.

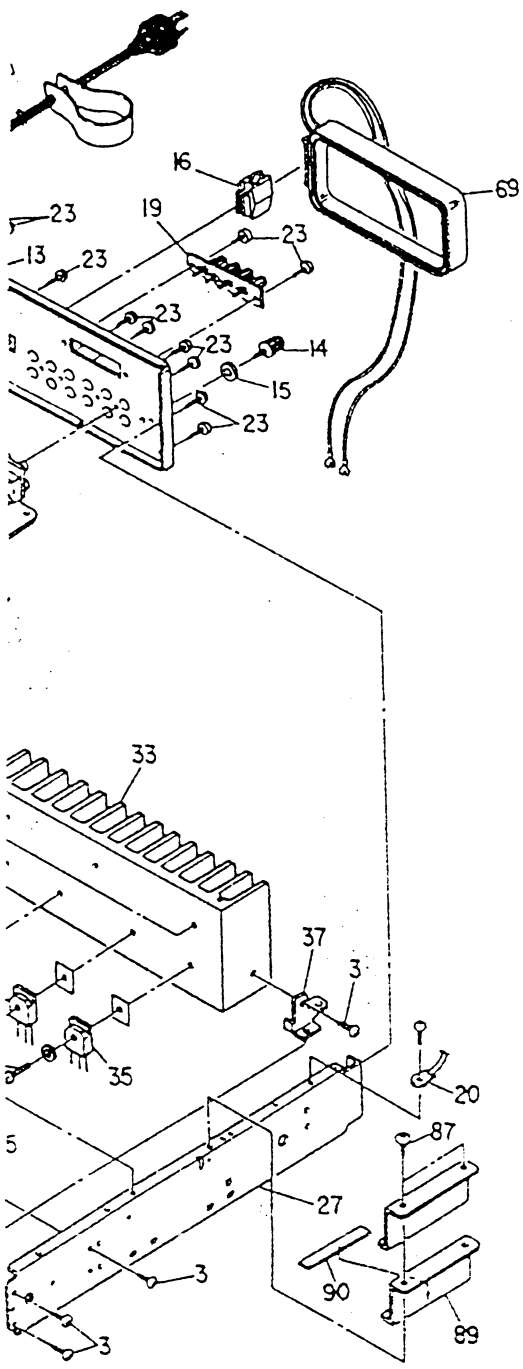

Ref. No.	Part No.	Part Name & Descriptions
87	4730804048	TAPPING SCREW WITH W. 3x8
88	ETC0526	FILTER UNIT
89	4121479008	BOARD BRACKET
90	4610121058	CUSHION
91		
92		
93		
94		
95		
96		
97		
98		
99		
100		
PACKING & ACCESSORIES (not included EXPLODED VIEW)		
a.	5040052013	CABINET COVER
*b.	5030262101	CUSHION
*c.	5010916008	CARTON CASE
d.	5050061007	ENVELOPE
*e.	5111170002	INST. MANUAL
f.	2034129007	ANTENNA LEAD
h.	5150312009	INFORMATION CARD

NIPPON COLUMBIA CO., LTD.
No. 14-14, 4-CHOME AKASAKA,
MINATO-KU, TOKYO 107 JAPAN
TEL: 03-584-8111
TLX: JAPANOLA J22591
CABLE: NIPPONCOLUMBIA TOKYO

Printed in Ja

ADDENDUM LIST Note: from ref. no. 201 to 207 and "i" are for EA model only.

Ref. No.	Part Name & Descriptions	Part No. EA for Australia
7	EQ. & TUNER UNIT	ETC0594D-1
9	EQ. & TUNER UNIT	ETC0594D-3
10	AMP. UNIT	ETC0595D-5
11	EQ. & TUNER UNIT	ETC0594D-2
12	AMP. UNIT	ETC0595D-1
13	BACK PANEL	1050563020
[redacted]	[redacted]	[redacted]
201	INSULATING COVER	4150153201
202	T TYPE LUG φ3	2050003107
203	INSULATING COVER	4150195007
204	NOTICE SHEET	5130212006
205	TOOTH WASHER φ3	4753001006
206	EARTH LABEL	5130140000
207	CORD HOLDER	EP-4772

Ref. No.	Part Name & Descriptions	Part No. EA for Australia
PACKING & ACCESSORIES		
b.	CUSHION	5030396019
c.	CARTON CASE	5010946036
e.	INST. MANUAL	5111211000
i.	POLY COVER	5050077004